STANDARD DRAWINGS

VIII. CONSTRUCTION STANDARD DRAWINGS

STD. DWG. NO.	DESCRIPTION	DATE	REVISED
STREET			
ST 1	Street Section	1996	1/2004
ST 2	Pedestrian Ramp	1996	6/2009
ST 3 (3 sheets)	Driveway Approach	2009	
ST 4	Curb, Gutter and Sidewalk	1996	6/2009
ST 5 (2 sheets)	Street Lights	2009	
ST 6 (2 sheets)	Street Tree Planting	1996	
ST 7	Street Name Post and Sign Post	1996	
ST 8	Temporary Barricade	1996	
ST 9	Standard Permanent Monument	1996	
STORM DRAIN			
SD 1	Storm Drain Manhole	1996	
SD 2	Standard Precast Concrete Storm Drain Manhole Reducer Slab	1996	
SD 3	Storm Drain Inlet Type "A"	1996	
WATER SYSTEM			
WA 1	Standard 1" Water Service Installation	1996	
WA 2	1-1/2", 2" and Larger Domestic Water Service	1996	
WA 3	Fire Hydrant Installation	1996	2008
WA 4	Standard Valve & Valve Box with Riser	1996	
WA 5	Temporary Blow Off with Main Line Valve; 6" and 8" Blow Off	1996	
WA 6	Concrete Anchor Blocks for Vertical Bends	1996	

WA 7	Concrete Thrust Block	1996	
WA 8	Water Main Lowering Detail	1996	
WA 9	Typical Location of Water Mains and Mainline Valves	1996	
WA 10	Pipe – Pipe Crossing Detail	1996	
WA 11	Pipe – Structure Crossing Detail	1996	
WA 12	¾" – 2" Double Check Valve Type Backflow Preventer	1996	
WA 13	Reduced-Pressure Backflow Preventer	1996	
WA 14	Double Detector Check Valve Single Service	1996	6/2009
WA 15	Temporary Blow-off with Harness	1996	
WA 16	Harness Installation for Flange Fittings	1996	
WA 17	Harness Installation	1996	
WA 18	Dirt Stop and Water Main Encasement	1996	
WA 19	Traffic-Type Precast Water Utility Manhole	1996	
WA 20	Typical Temporary Blowoff and/or Metered Connection – Mains Under Constr.	1996	
WA 21	Installation of Butterfly Valve and Tapping Valve	1996	
WA 22	Typical Installations of Air and Vacuum Air Release Valve	1996	

WASTEWATER SYSTEM

WW 1	Sewer Service Lateral	1996	
WW 1R	Sewer Service Lateral Retrofit	2009	
WW 2	Standard Precast Concrete Manhole Reducer Slab	1996	
WW 3	Typical Service Sewer Connection Details	1996	
WW 4	Backwater Check Valve Installation	1996	
WW 5	Drop Manhole (Inside)	2009	
WW 5A	Drop Manhole (Outside)	1996	
WW 6	Standard 48" Diameter Precast Concrete	1996	2009

	Manhole Sanitary Sewer		
WW 7	Standard 60" Diameter Precast Concrete Manhole Sanitary Sewer	1996	2009
WW 8	Standard Manhole Frame and Cover	1996	
WW 9 (2 sheets)	Service Sewer Trench Detail on Private Property; Standard Trench Detail	1996	2009
WW 10 (2 sheets)	Permanent Mainline Cleanout; Temporary Mainline Cleanout	1996	
WW 11	Abandoned Pipe Plug Detail	1996	
WW 12	Sampling Manhole Exterior Use	1996	
WW 13	Sampling Box Building Interior	1996	
WW 14	Plastic Sewer Pipe Deflection Mandrel	1996	
WW 15	Sand and Grease Interceptor	1996	
WW 16	Grease Interceptor	1996	

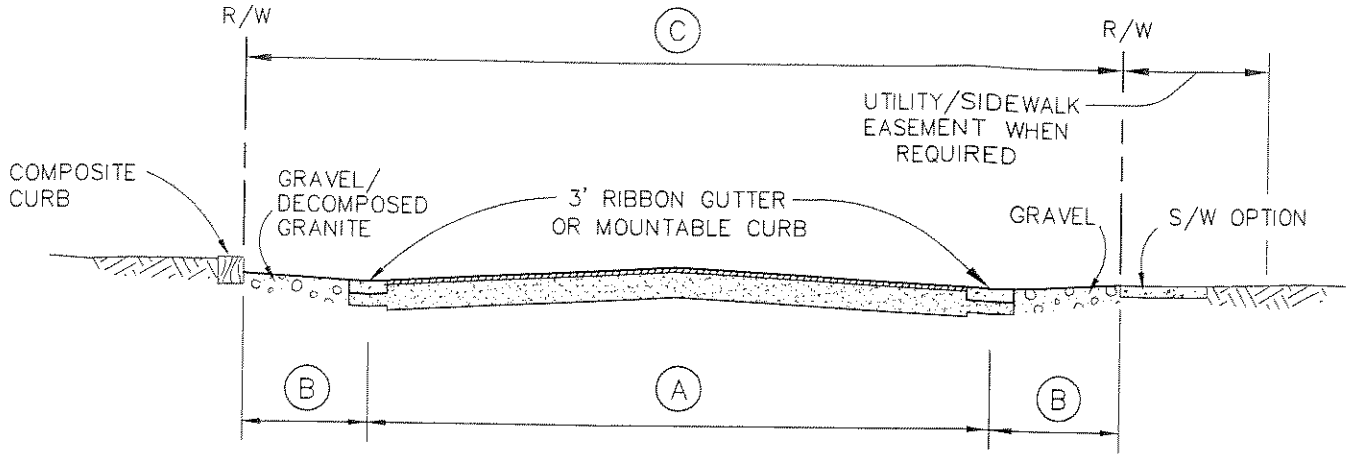

ALTERNATIVE

RESIDENTIAL STREETS

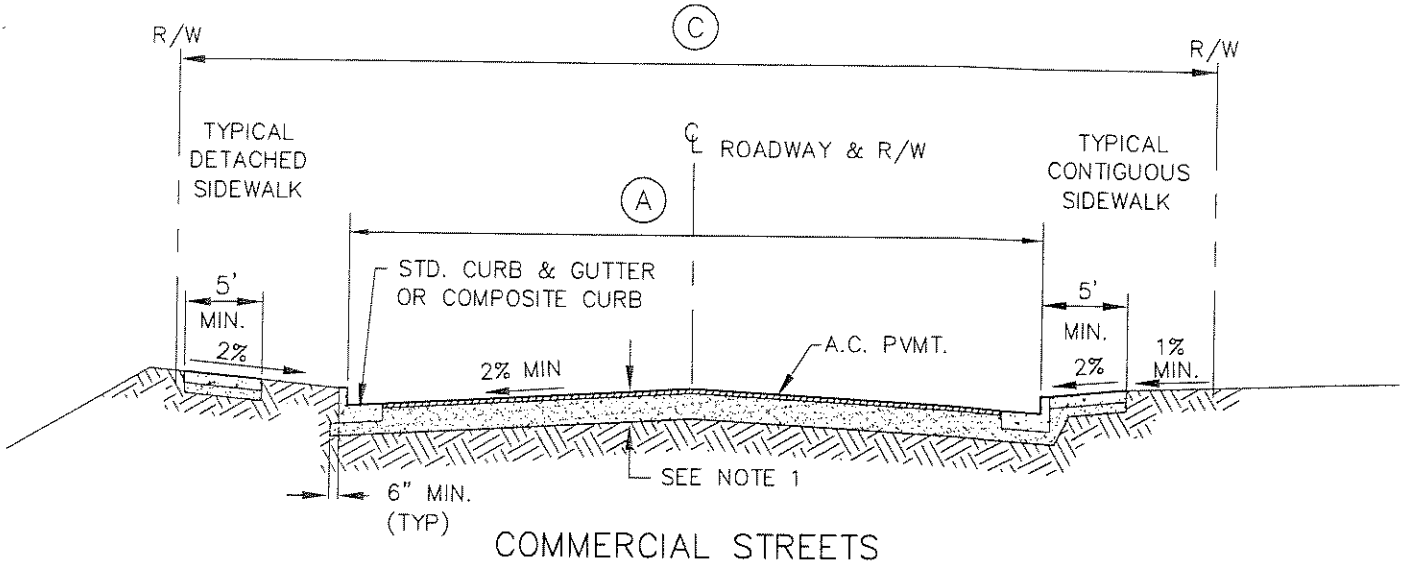

COMMERCIAL STREETS

STREET TYPE	PAVEMENT WIDTH (A)	GRAVEL SHOULDER WIDTH (EA.) (B)	RIGHT-OF-WAY WIDTH (C)	RETURN RADIUS
COMMERCIAL	40' TO 42'		50' TO 62'	30'
TYPICAL RESIDENTIAL	36'	8'	52'	20'
NARROW RESIDENTIAL	24'	8'	40'	10'
RESIDENTIAL ALLEY	15' ONE WAY 20' TWO WAY	3'	21' 26'	5'

NOTES:

1. STREET DIMENSIONS AND CONFIGURATIONS SHALL CONFORM TO THE YOUNTVILLE GENERAL PLAN AND DESIGN DOCUMENT DATED DECEMBER 29, 1992.
2. STREET FRONTAGES WILL BE CONSIDERED ON A CASE BY CASE BASIS.

REVISED JAN. 2004

TOWN OF YOUNTVILLE	STREET SECTION				STD. NO. ST 1
	SCALE: NONE	DRAWN: LMM	CHK: PHK	RVSD: PHK	DATE: 1996

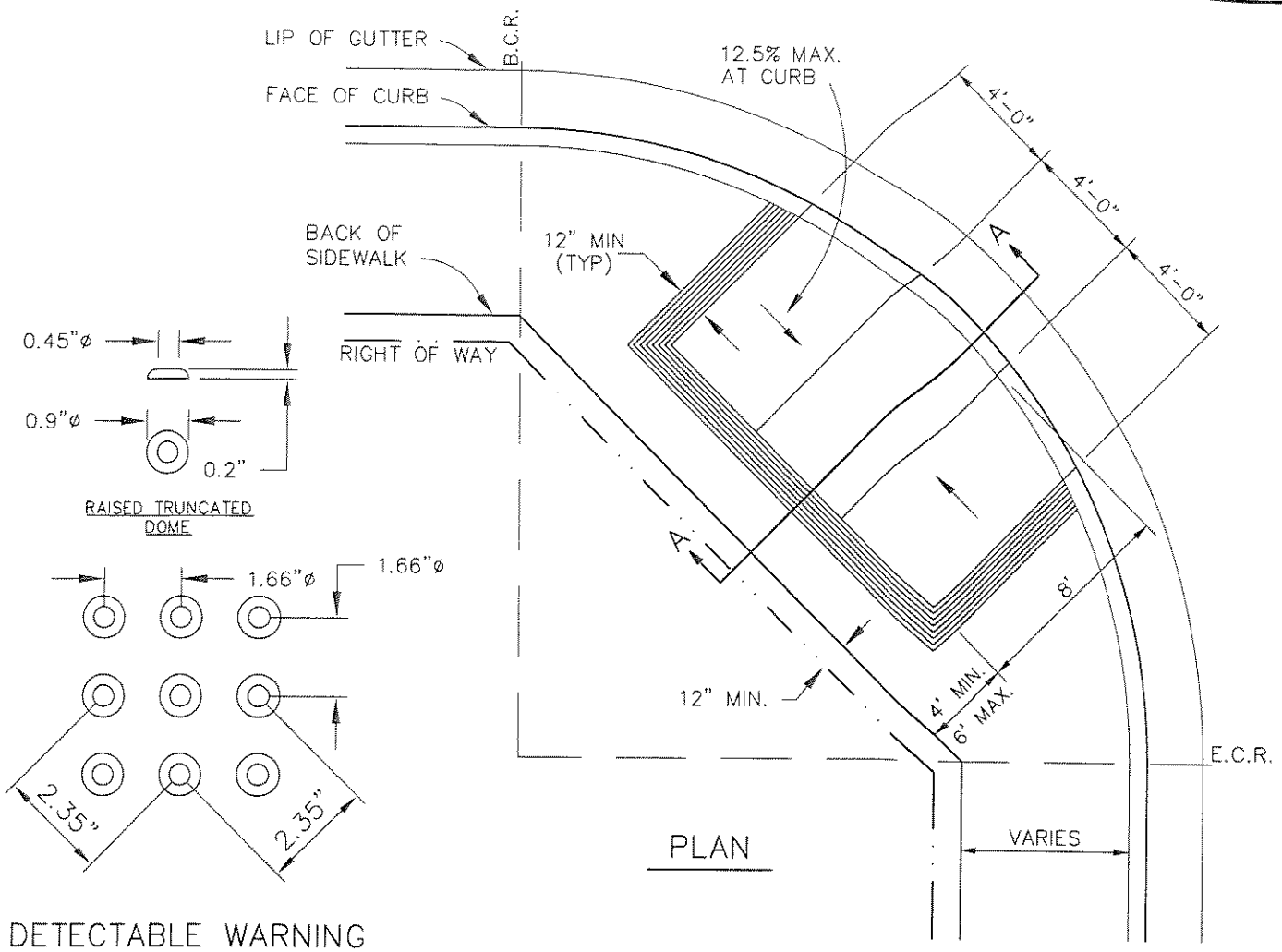

DETECTABLE WARNING SURFACE

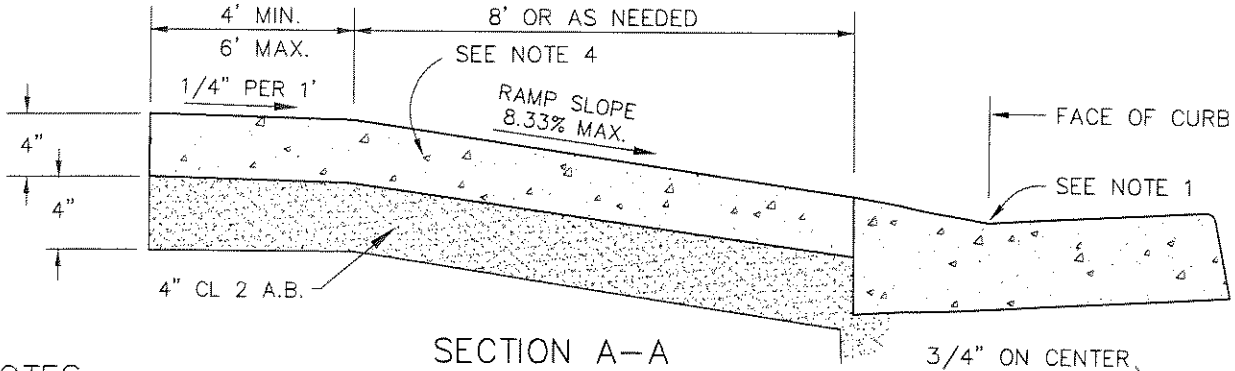

SECTION A–A

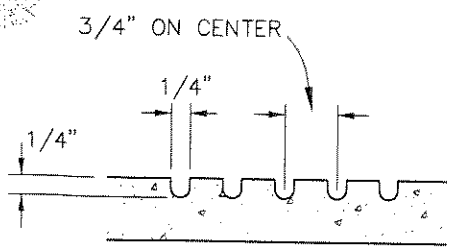

GROOVING DETAIL

NOTES:

1. RAMP SHALL BE CONSTRUCTED WITH NO LIP AT GUTTER FLOWLINE.
2. RAMP SHALL BE LOCATED AT THE CENTER OF THE CURB RETURN.
3. CONCRETE SHALL BE CLASS A.
4. TRUNCATED DOMES PER STATE STANDARDS.

TOWN OF YOUNTVILLE	PEDESTRIAN RAMP				STD. NO. ST 2
	SCALE: NONE	DRAWN: LMM	CHK: PHK	RVSD:	DATE: 2009

Path: F:\BMAP-STD\Yountvil\STDS\YNTST2.dwg Layout Name: Model Plot Date: Jul 09, 2009 at 04:35 pm

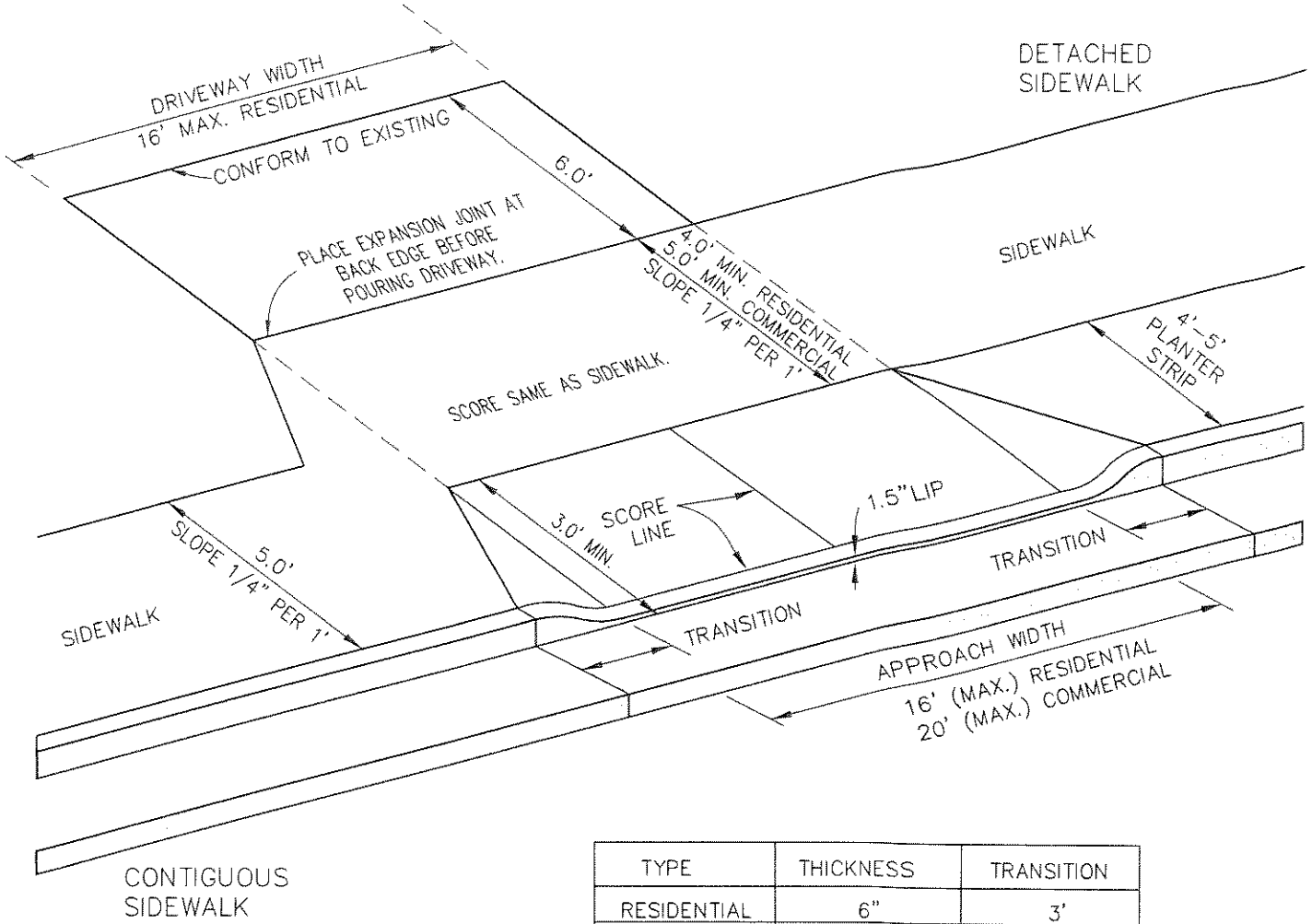

TYPE	THICKNESS	TRANSITION
RESIDENTIAL	6"	3'
COMMERCIAL	6"	4'

NOTES:

1. SEE STANDARD DRAWING ST 4 FOR GENERAL NOTES.
2. MAINTAIN CONTINUOUS SIDEWALK WIDTH.
3. SIDEWALKS 3' MIN. CLEAR AROUND ALL OBSTRUCTIONS (UTILITIES & LIGHT POLES, HYDRANTS, SIGNS, MAILBOXES, ETC.) RECONSTRUCT CONCRETE DRIVEWAY 6" CONCRETE OVER 4" CLASS II A.B. CONFORM.

TOWN OF YOUNTVILLE	DRIVEWAY APPROACH				STD. NO. ST 3
	SCALE: NONE	DRAWN: CLG	CHK: PHK	RVSD:	DATE: 2009

Images:
Xrefs:
Path: F:\BMAP-STD\Yountvil\STDS\YNTST3.DWG Layout Name: 1 of 3 Plot Date: Jul 06, 2009 at 05:19 pm

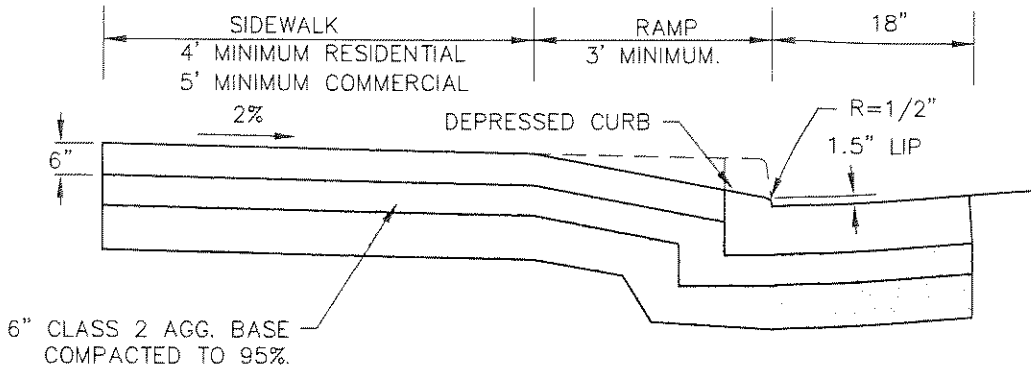

NOTES:

1. MAXIMUM SIDEWALK CROSS SLOPE 2% (1/4" PER FOOT).
2. ALL CONCRETE SHALL BE CLASS A.
3. WELDED WIRE FABRIC (4" x 4", 10/10) SHALL BE PLACED THROUGHOUT COMMERCIAL AND INDUSTRIAL DRIVEWAYS WITHIN THE STREET RIGHT OF WAY.
4. WEAKENED PLANE JOINTS SHALL BE INSTALLED AT THE CENTER OF ALL DRIVEWAYS OVER 20' WIDE.

TOWN OF YOUNTVILLE	DRIVEWAY APPROACH				STD. NO. ST 3
	SCALE: NONE	DRAWN: CLG	CHK: PHK	RVSD:	DATE: 2009

Images:
Xrefs:
Path: F:\BMAP-STD\Yountvil\STDS\YNTST3.DWG Layout Name: 2 of 3 Plot Date: Jul 06, 2009 at 05:18 pm

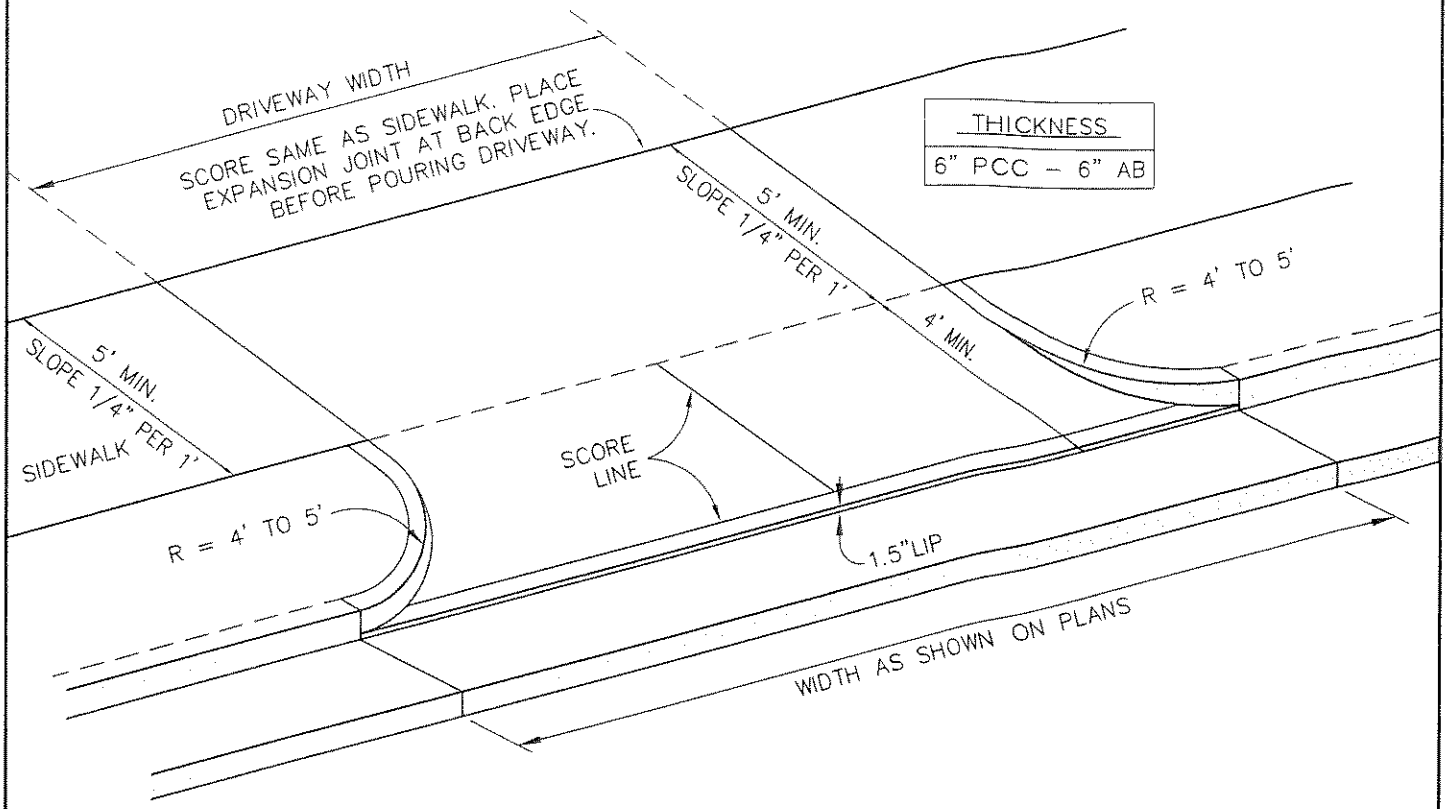

TOWN OF YOUNTVILLE	ALTERNATIVE DRIVEWAY APPROACH				STD. NO. ST 3
	SCALE: NONE	DRAWN: CLG	CHK: PHK	RVSD:	DATE: 2009

Images:
Xrefs:
Path: F:\BMAP-STD\Yountvill\STDS\NTSTJ.DWG Layout Name: 3 of 3 Plot Date: Jul 06, 2009 at 05:18 pm

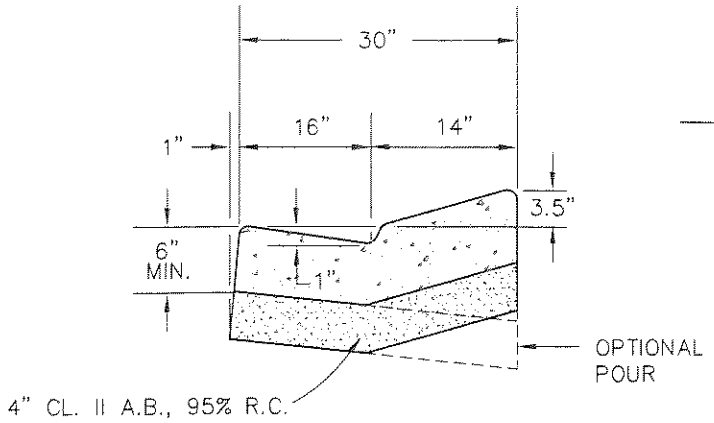

ROLLED
CURB AND GUTTER

NOT TO SCALE

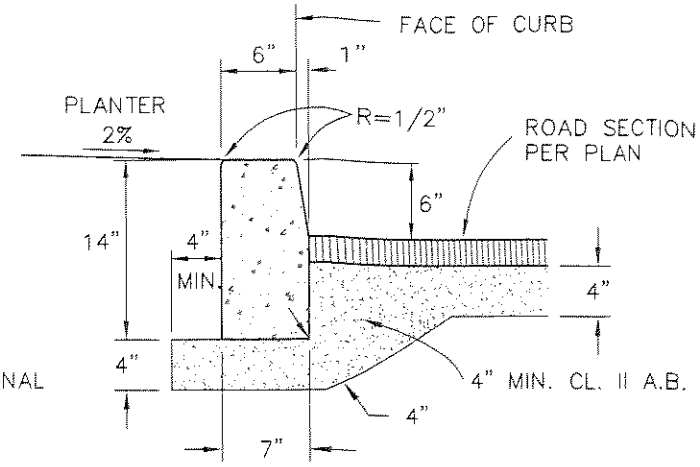

VERTICAL CURB

NOT TO SCALE

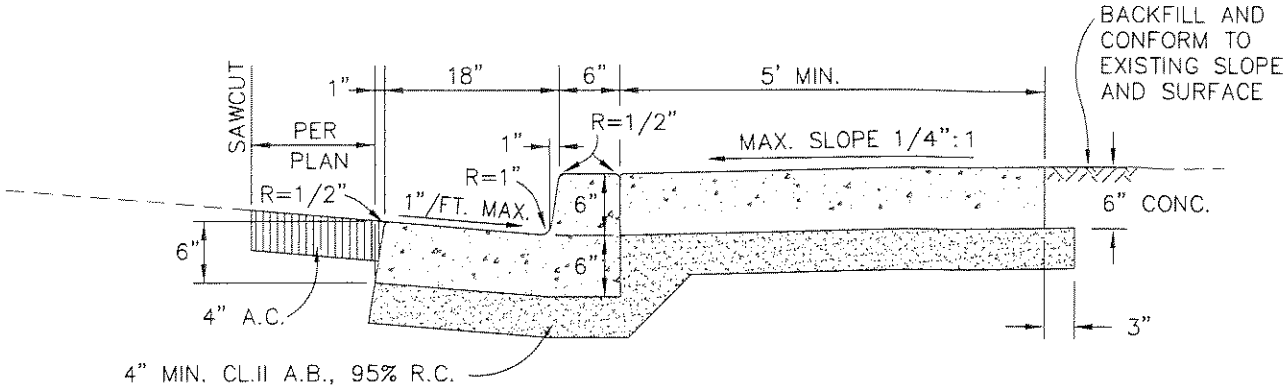

STANDARD
CURB AND GUTTER

NOT TO SCALE

NOTES:

1. CONCRETE SHALL BE CLASS A AND SHALL CONTAIN NOT LESS THAN 6 SACKS OF CEMENT AND 2 LBS. OF LAMPBLACK OR BLACK INTEGRAL COLORING PER CUBIC YARD.
2. EXPANSION JOINTS, 1/2 INCH WIDE, SHALL BE INSTALLED AT EACH SIDE OF STRUCTURES, AT ENDS OF CURB RETURNS AND AT THE TOP OF DRIVEWAY TAPERS.
3. EXPANSION JOINTS SHALL BE INSTALLED AT 60 FOOT INTERVALS, WITH WEAKENED PLANE JOINTS EVERY 15 FEET.
4. SIDEWALKS SHALL BE SCORED INTO 5 FOOT SQUARES UNLESS SPECIFIED BY ENGINEER.
5. IF EXTRUSION MACHINE IS USED EXPANSION JOINTS SHALL BE DEEP SCORE NO LESS THAN 1/3 THE CONCRETE THICKNESS.
6. WEIGHT OF CURB AND/OR SIDEWALK AND CLASS 2 AGGREGATE SHALL EXCEED THE EXPANSION PRESSURE OF THE BASEMENT SOIL 'R' VALUE.
7. SINK TOP OF REBAR OR SPIKE 1/2" BELOW TOP OF COMPOSITE CURB.

TOWN OF YOUNTVILLE	CURB, GUTTER AND SIDEWALK				STD. NO. ST 4
	SCALE: NONE	DRAWN: LMM	CHK: PHK	RVSD:	DATE: 2009

BANNER ARMS: HOLOPHANE
CATALOG #BBA24B4C05U136B
LAMP: HOLOPHANE
HALLBROOK II LUMINAIRE
CATALOG NUMBER
GS-70HP-MA-2-B-S-73-N

NOTES:
1. POLE IS HOLOPHANE COLORADO SERIES, 12" OCT. BASE, CATALOG NUMBER C016S5/12-CA/BK-GFIUS-SBKH.
2. WATTAGE: 70W; VOLTAGE: PRE-WIRED TO 120V.
3. LAMP ARM AND POLE SHALL BE BLACK.
4. FESTOON RECEPTACLE AND DUAL BANNER ARMS FOR ALL INSTALLATIONS ON WASHINGTON STREET & WHERE SPECIFIED BY TOWN.
5. ALL RECEPTACLES SHALL BE GFI PROTECTED.
6. LOWER RECEPTACLE REQUIRED ON WASHINGTON STREET BETWEEN YOUNT AND HUMBOLDT STREET & WHERE SPECIFIED BY TOWN.

LAMP DETAIL

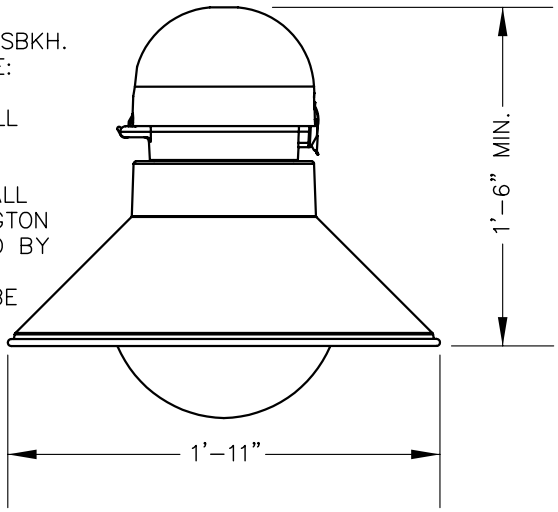

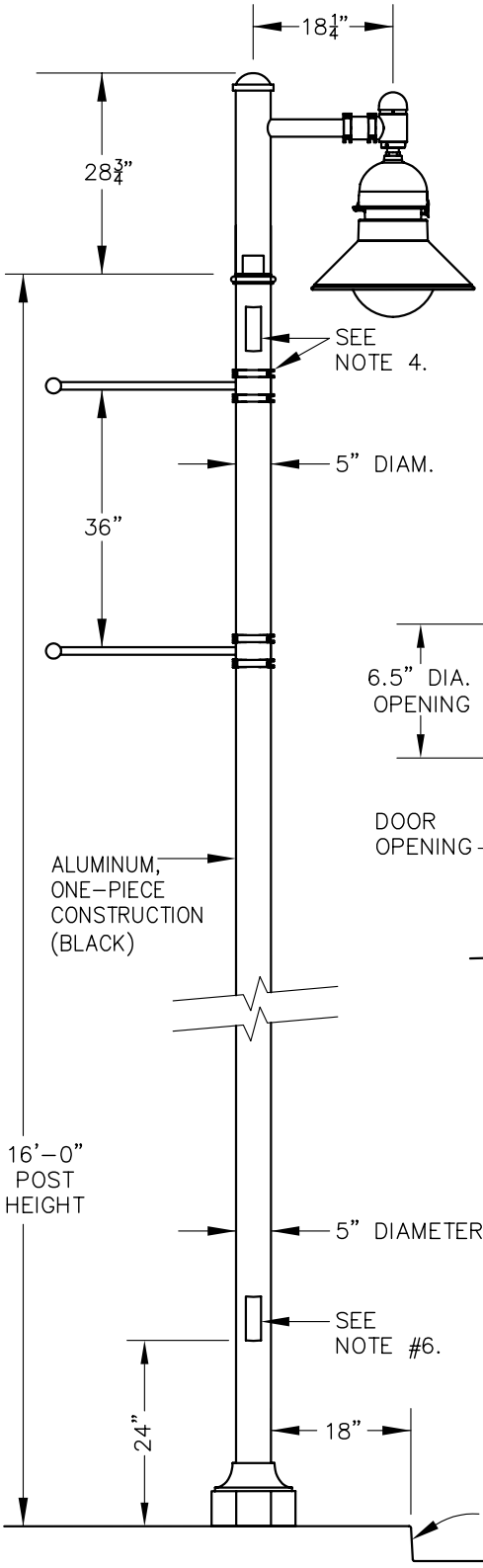

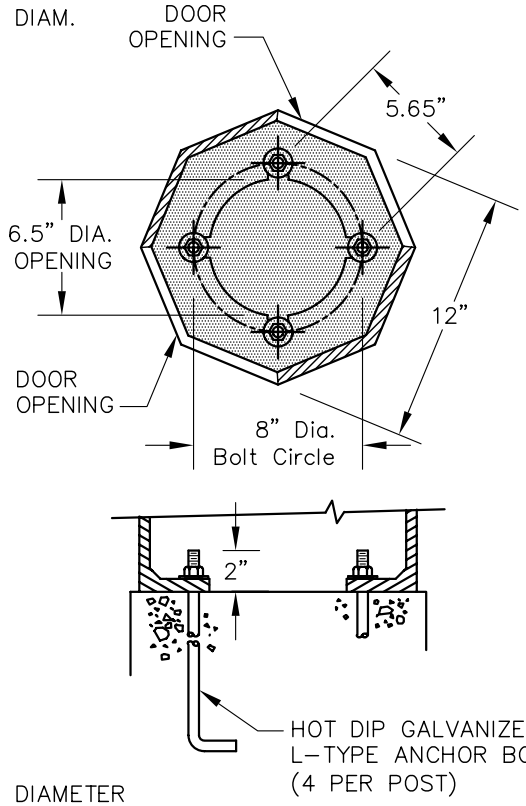

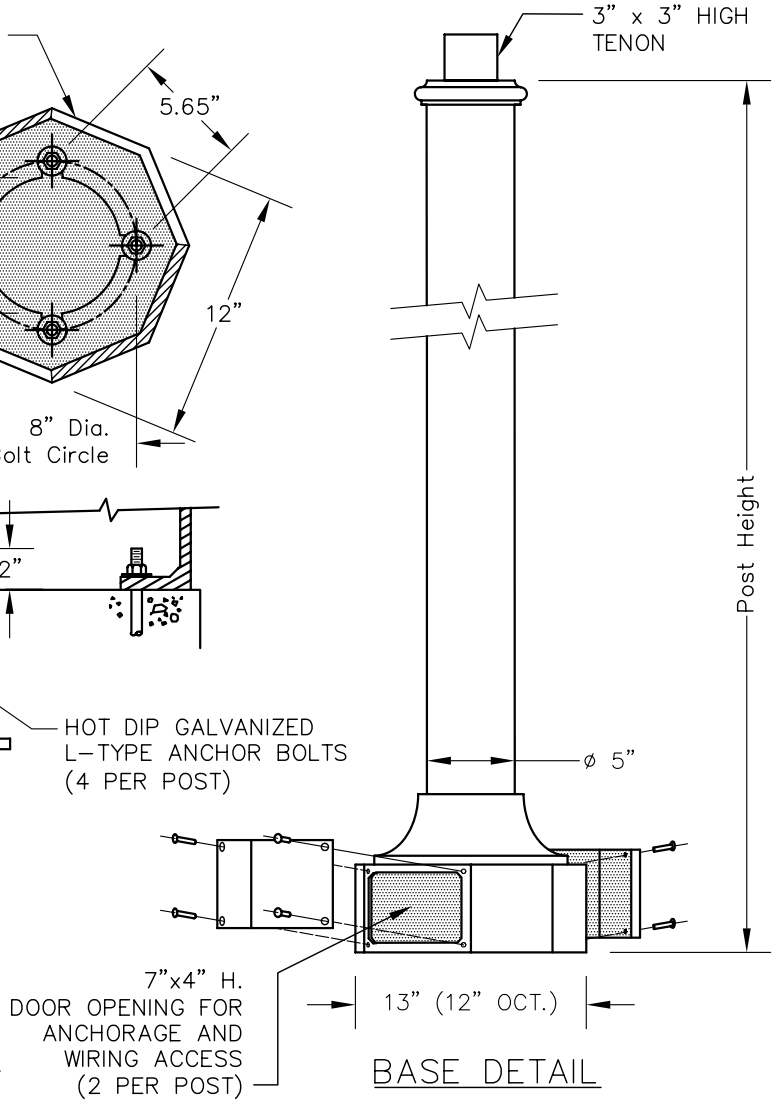

BASE DETAIL

TOWN OF YOUNTVILLE	STREET LIGHT				STD. NO. ST 5
	SCALE: NONE	DRAWN: CG	CHK:	RVSD:	DATE: DEC. 2009

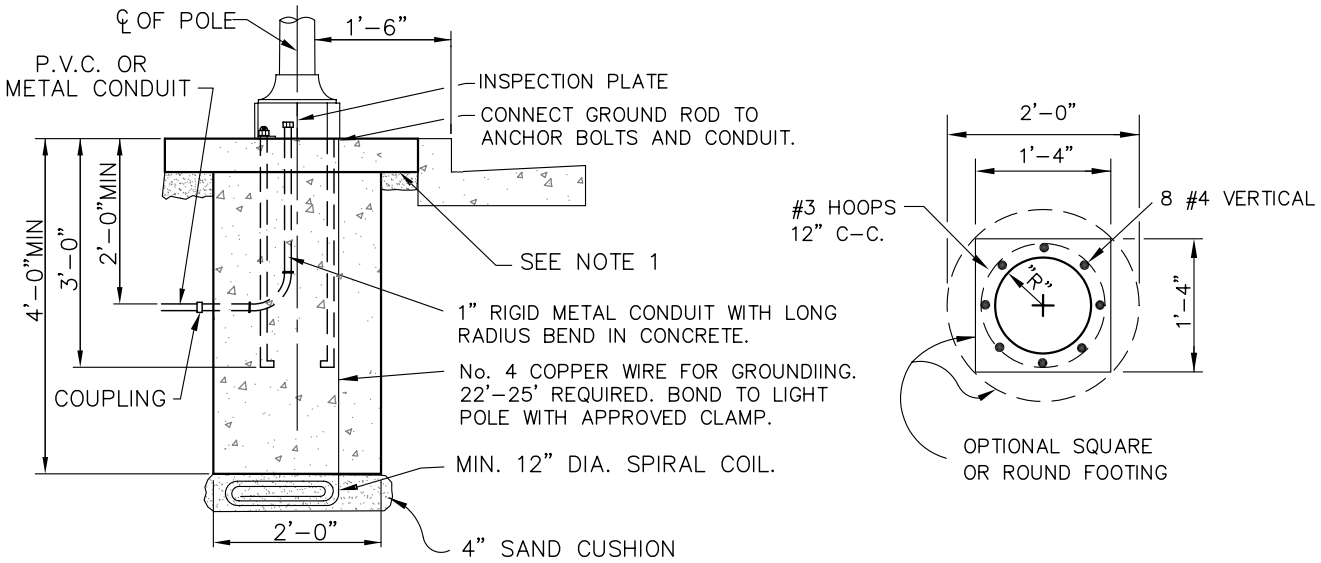

CONCRETE FOOTING & BASE DETAIL

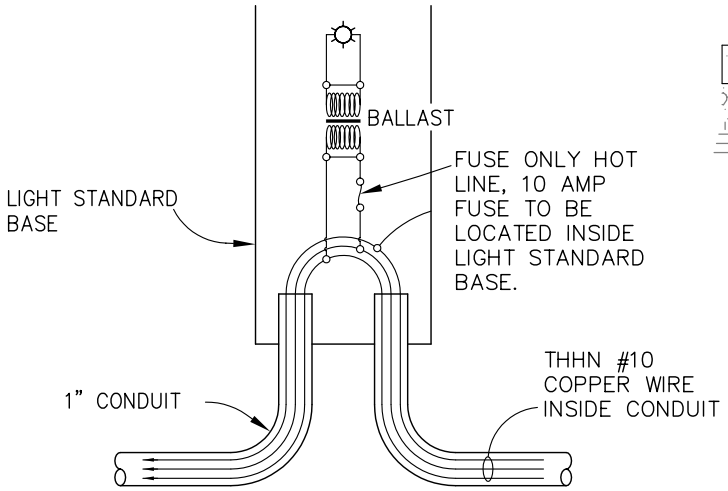

LIGHT STANDARD

WIRING DETAIL

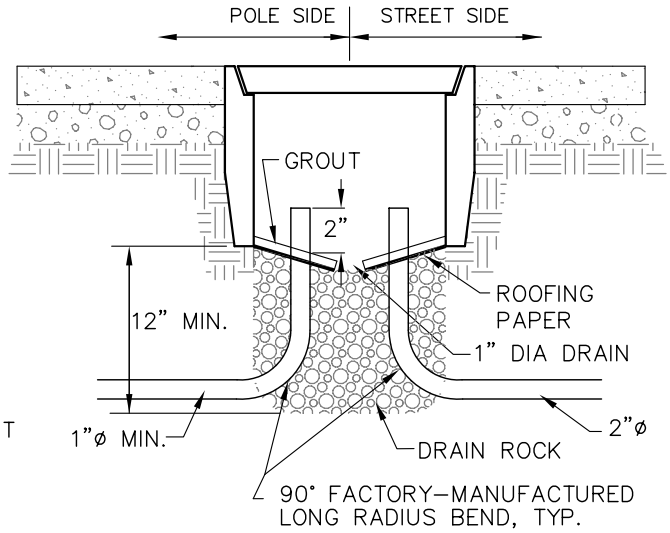

NO. 5 CONCRETE PULL BOX

NOTE: PULL BOX COVERS SHALL BE BOLTED AND INSCRIBED "STREET LIGHTING".

NOTES:

1. IN UNDEVELOPED AREAS, CONSTRUCT A 2'x2' CONC. PAD (4" THICK). IF ROUND FOOTING IS POURED, STOP AT THE ELEVATION OF BOTTOM OF THE SIDEWALK.
2. ANCHOR BOLT DIMENSION "R" AND BOLT PATTERN TO SUIT POLE BASE FURNISHED.
3. CONCRETE SHALL BE CLASS "A" P.C.C. AGAINST UNDISTURBED SOIL.
4. A MINIMUM OF TWO FULL THREADS TO BE EXPOSED ABOVE ANCHOR BOLT NUTS.
5. FOUNDATION BOLTS SHALL NOT BE CUT OFF FOR ANY REASON. EXTENSION BOLTS WILL NOT BE PERMITTED.
6. UPPER FESTOON RECEPTACLES (WHERE REQUIRED) SHALL BE WIRED IN SERIES WITH STREET LIGHTS.
7. LOWER FESTOON RECEPTACLES (WHERE REQUIRED) SHALL BE WIRED TO A SEPARATE CIRCUIT FROM THE STREET LIGHTS.

TOWN OF YOUNTVILLE	STREET LIGHT FOUNDATION				STD. NO. ST 5
	SCALE: NONE	DRAWN: CG	CHK:	RVSD:	DATE: DEC. 2009

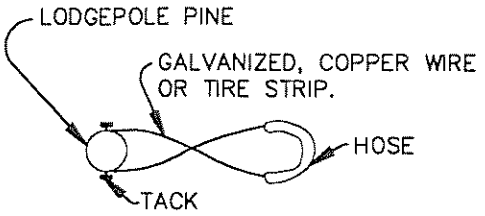

TREE TIE DETAIL

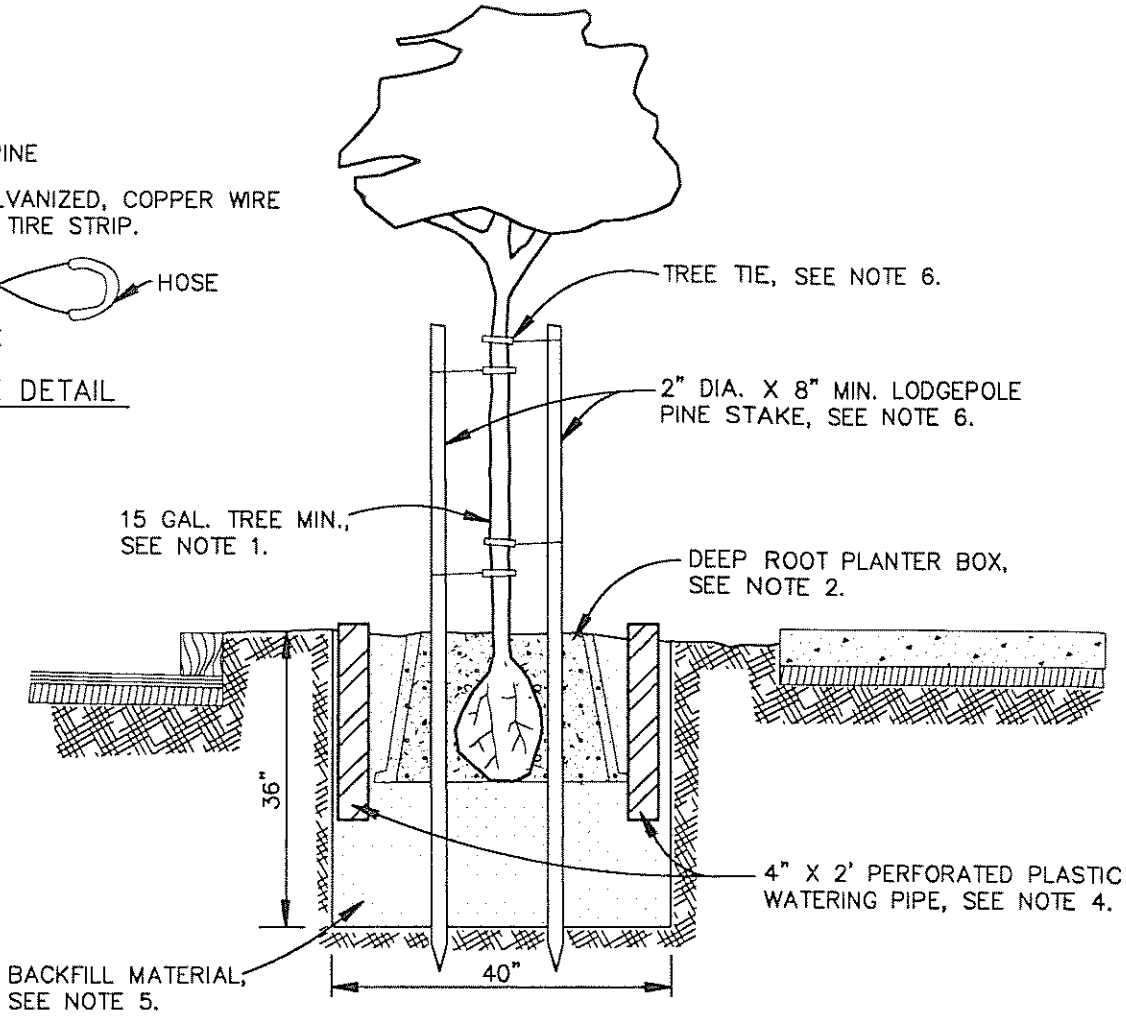

PLANTING DETAIL

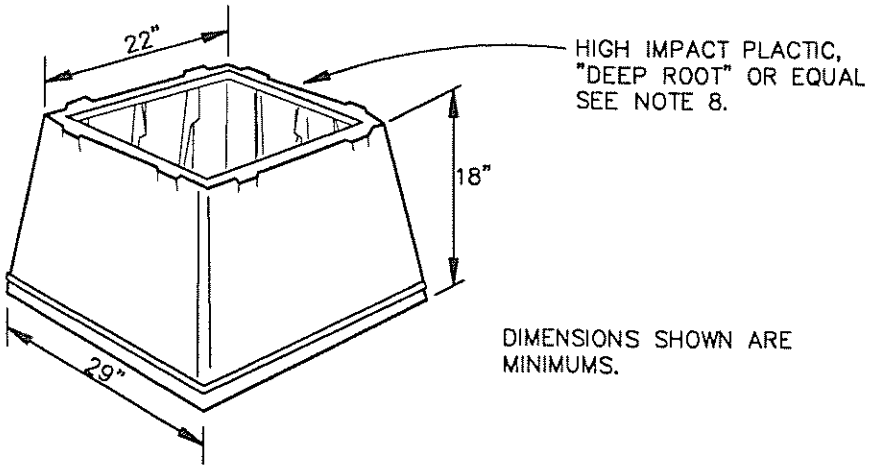

DEEP ROOT PLANTER

SHEET 1 OF 2

TOWN OF YOUNTVILLE	STREET TREE PLANTING				STD. NO. ST 6
	SCALE: NONE	DRAWN: LMM	CHK: PHK	RVSD:	DATE: 1996

GENERAL NOTES:

1. TREES SHALL BE OF A SIZE NOT LESS THAN 8 FT. IN HEIGHT NOR LESS THAN 1 INCH CALIPER. A TREE MAY BE REJECTED IT IS NOT OF A SHAPE OR CONDITION ACCEPTABLE TO THE TOWN.

2. THE TREE SHALL BE PLANTED IN DEEP ROOT PLANTER BOX. THE PLANTER BOX MUST BE A MINIMUM OF 22 INCHES AT THE TOP, 29 INCHES AT THE BOTTOM AND 18 INCHES DEEP.

3. THE TREE SHALL BE PLANTED IN A HOLE 40 INCHES SQUARE BY 36 INCHES DEEP.

4. INSTALL TWO DEEP WATERING PERFORATED PLASTIC PIPES AS SHOWN. FILL PIPES WITH 3/4 INCH CLEAN DRAIN ROCK.

5. TREES SHALL BE PLANTED IN A MIXTURE OF 1/2 NATIVE SOIL AND 1/2 LEAF MOLD OR REDWOOD MULCH.

6. TREES SHALL BE STAKED WITH TWO 2 INCH BY 8 FT. MINIMUM LODGE POLE PINE STAKES OR EQUAL. STAKES SHALL BE COATED WITH GREEN PRESERVATIVE STAIN. TREES SHALL BE TIED WITH "GRO STRAIT" TREE TIES, OR SIMILAR.

7. TREES SHALL BE PLANTED A MINIMUM OF 20 FT. APART TO A MAXIMUM OF 50 FT. APART DEPENDING ON THE TYPE OF THE TREE. TREES SHALL BE PLANTED A MINIMUM OF 20 FT. FROM CURB RETURNS, 15 FT. FROM STREET LIGHTS AND 6 FT. FROM DRIVEWAYS, SEWER LATERALS AND WATER SERVICES OR AS OTHERWISE APPROVED BY THE TOWN.

8. DEEP ROOT PLANTER SHALL BE FABRICATED FROM A HIGH DENSITY AND HIGH IMPACT PLASTIC SUCH AS POLYVINYL CHLORIDE, ABS OR POLYETHYLENE AND HAVE A MINIMUM THICKNESS OF 0.06 INCH. THE PLASTIC SHALL HAVE 1/2 INCH HIGH RAISED VERTICAL RIBS ON THE INNER SURFACE SPACED NOT MORE THAN SIX (6) INCHES APART.

TOWN OF YOUNTVILLE	STREET TREE PLANTING				STD. NO. ST 6
	SCALE: NONE	DRAWN: LMM	CHK: PHK	RVSD:	DATE: 1996

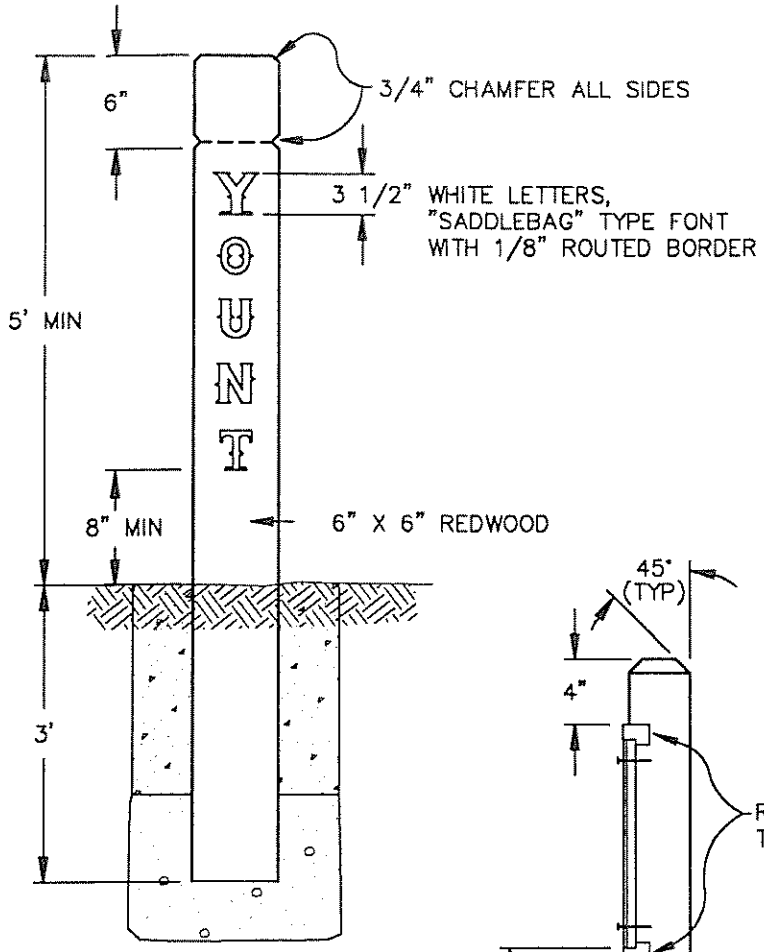

STREET NAME POST

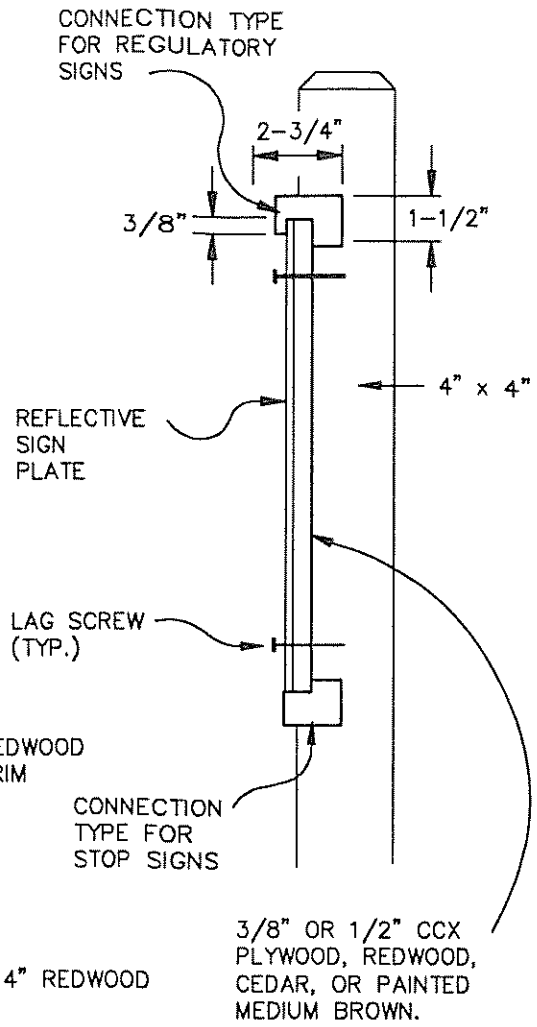

SIGN DETAIL

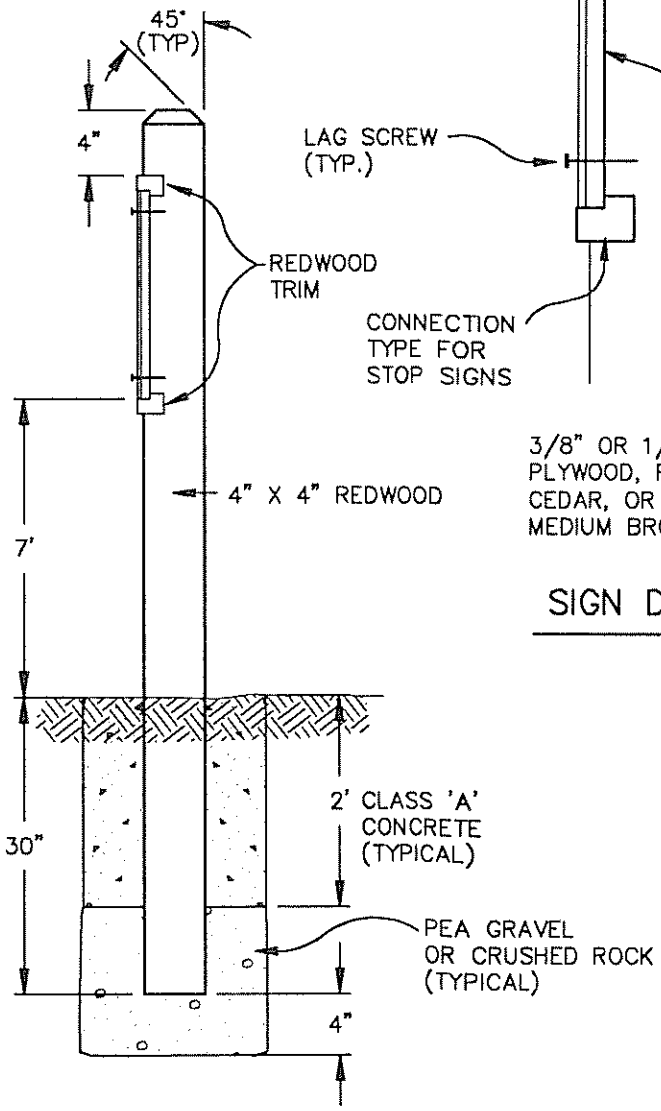

SIGNS TYPICAL

NOTES:

1. ALL REDWOOD TO BE CONSTRUCTION HEART OR BETTER.
2. DO NOT WRITE "STREET" OR "AVE" ON POST.

SHEET 1 OF 2

TOWN OF YOUNTVILLE	STREET NAME POST AND SIGN POST				STD. NO. ST 7
	SCALE: NONE	DRAWN: LMM	CHK: PHK	RVSD:	DATE: 1996

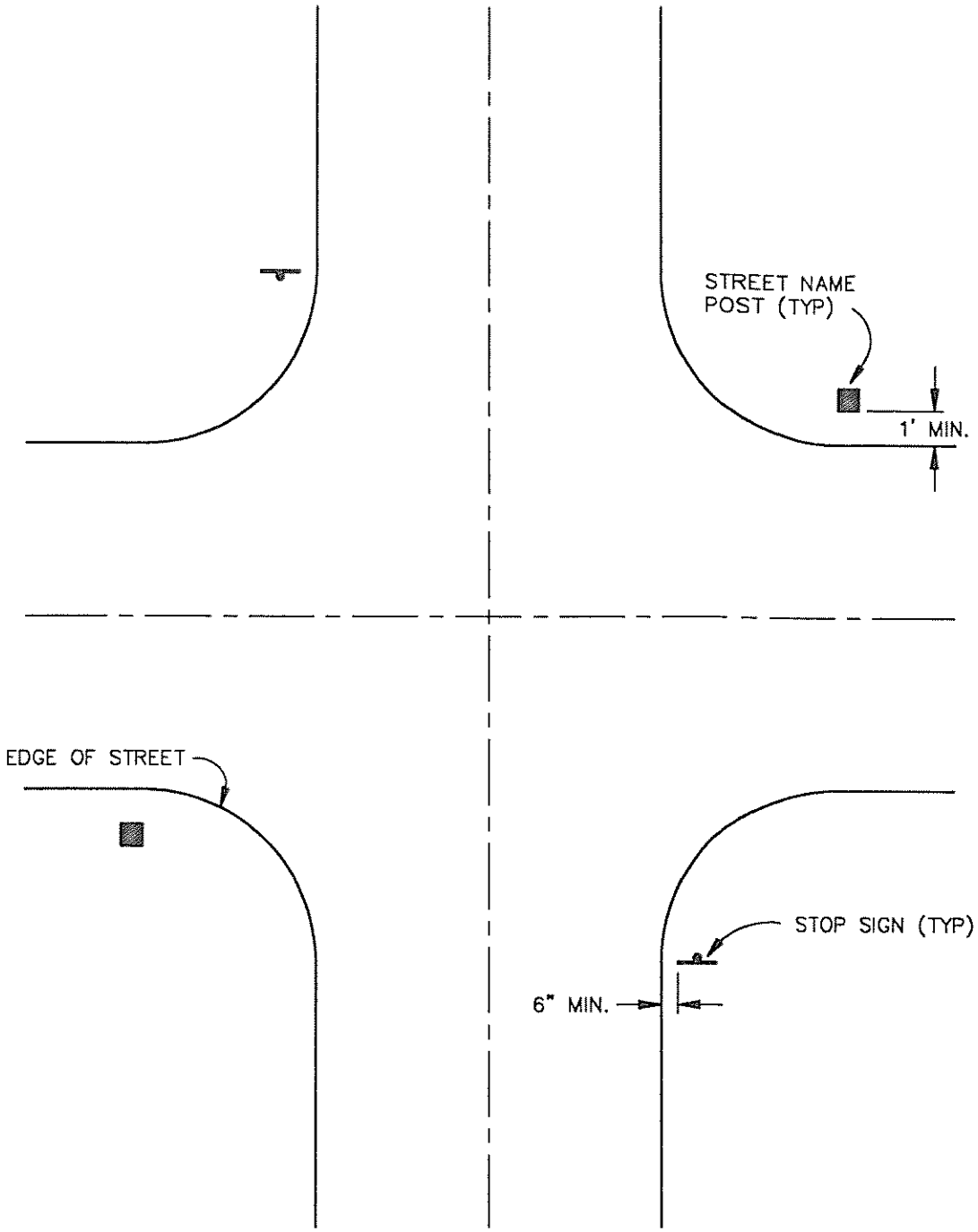

NOTE:

FOR "T" INTERSECTIONS ONE OF THE STREET NAME POSTS WILL BE PLACED AT THE TOP OF THE "T".

SHEET 2 OF 2

TOWN OF YOUNTVILLE	STREET NAME POST AND SIGN POST				STD. NO. ST 7
	SCALE: NONE	DRAWN: LMM	CHK: PHK	RVSD:	DATE: 1996

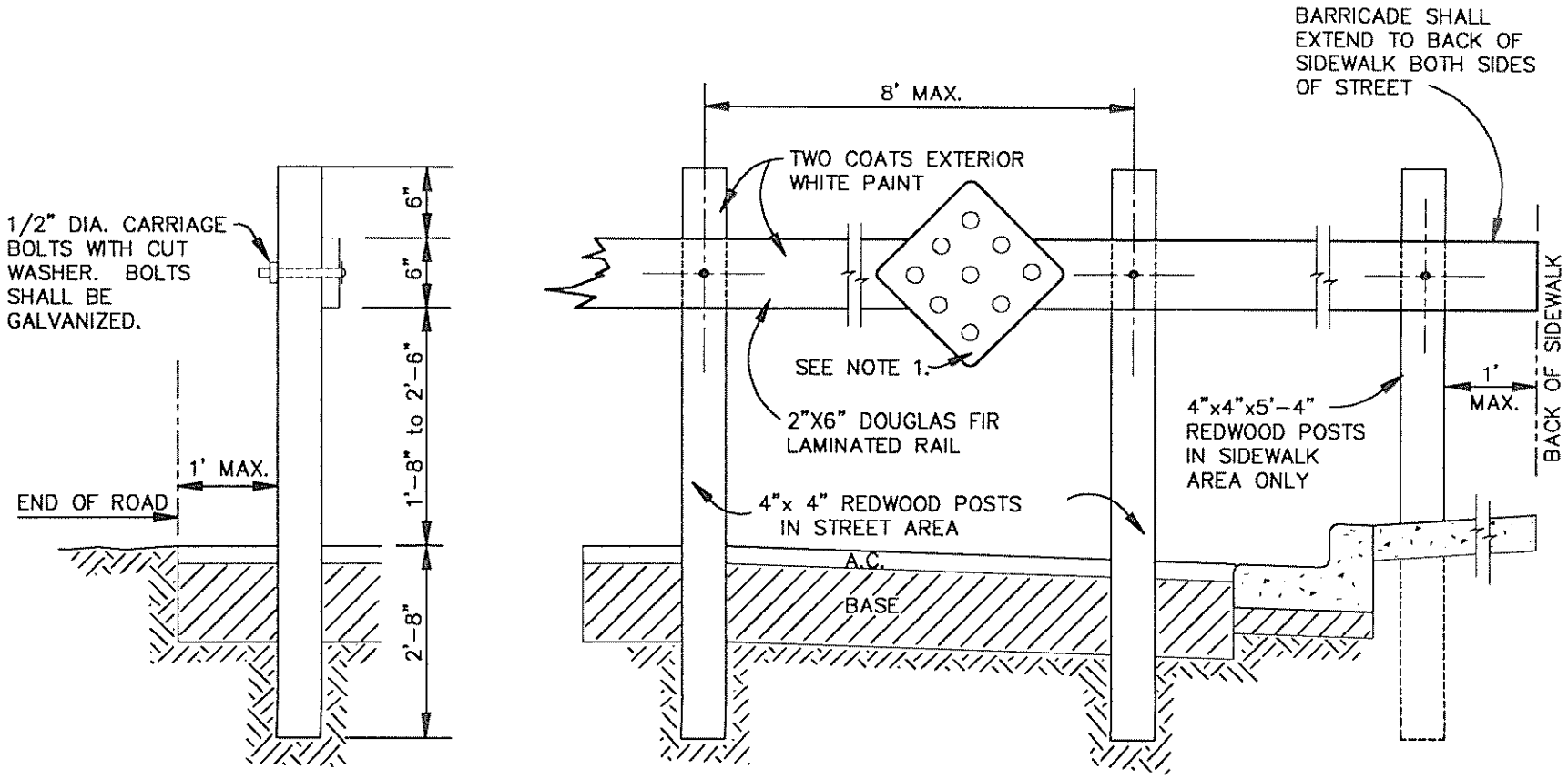

NOTES:

1. INSTALL 18" X 18" ALUMINUM TYPE N-5 REFLECTOR, NO MORE THAN 8' o.c., MINIMUM 3.
2. SIDEWALKS ONLY – INSTALL 4" YELLOW REFLECTORS.
3. POST HOLES SHALL BE BACK FILLED WITH CLASS II A.B.

TOWN OF YOUNTVILLE

TEMPORARY BARRICADE

STD. NO. ST 8

SCALE: NONE | DRAWN: LMM | CHK: PHK | RVSD: | DATE: 1996

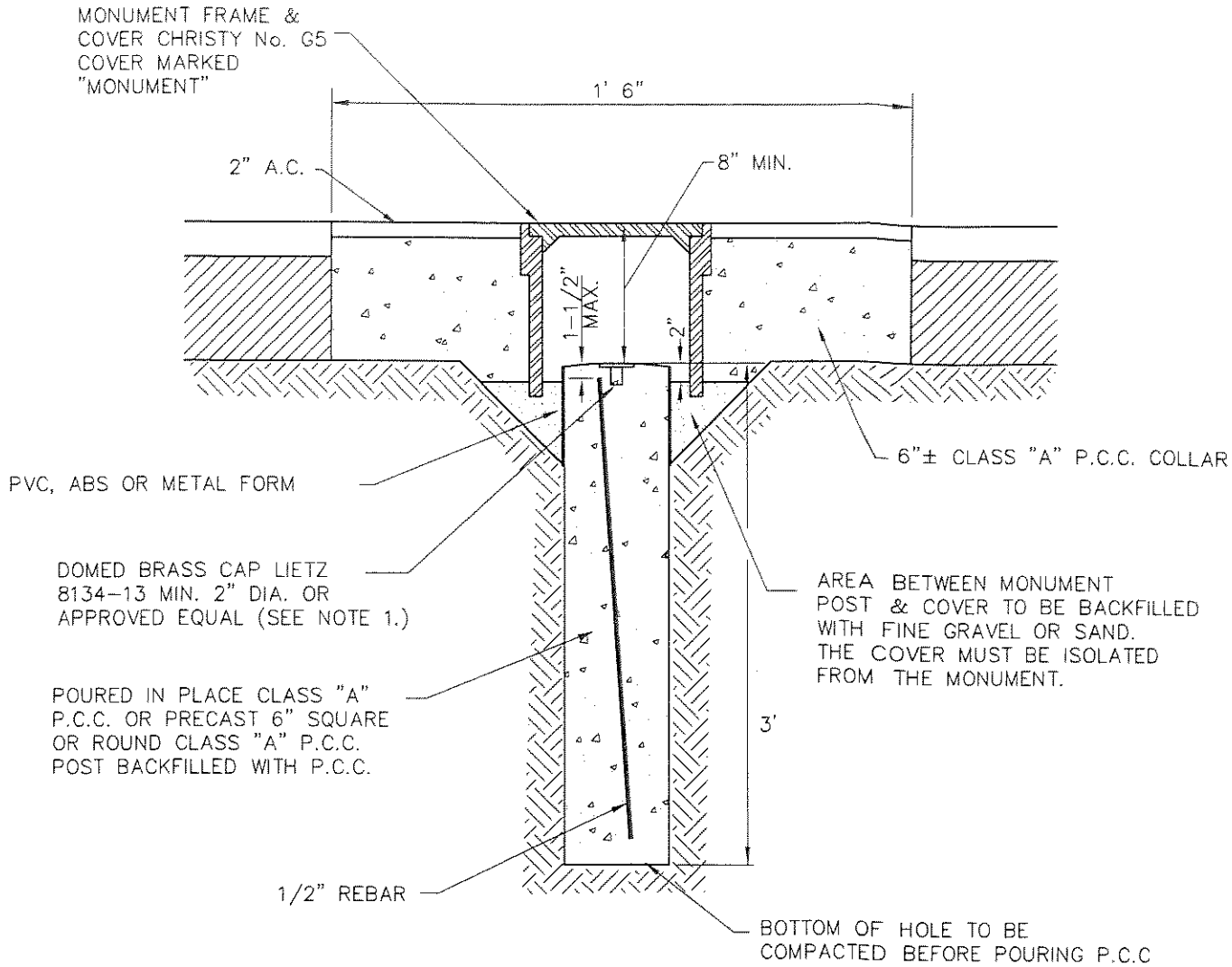

NOTES:

1. SURVEYOR OR ENGINEER SETTING THE MONUMENT SHALL INDICATE EXACT POINT BY MAKING A CROSS ON THE CAP AND SHALL STAMP YEAR SET AND HIS/HER LICENSE TYPE AND NUMBER.
2. THE DEPTH OF THE MONUMENT POST SHALL BE LENGTHENED OR SHORTENED AS DICTATED BY THE GROUND CONDITIONS OR AS APPROVED BY THE TOWN ENGINEER. IN SOFT GROUND OR FILL AREAS THE MONUMENT POST SHALL BE LENGTHENED TO BED IT ON A STABLE BASE.
3. AS AN OPTION, INSTALLATION MAY BE PER CURRENT TOWN OF YOUNTVILLE STANDARDS.

TOWN OF YOUNTVILLE	STANDARD PERMANENT MONUMENT				STD. NO. ST 9
	SCALE: NONE	DRAWN: LMM	CHK: PHK	RVSD:	DATE: 2009

Path: F:\BMAP-STD\Yountvil\STDS\YNTST9.DWG Layout Name: Model Plot Date: Jul 01, 2009 at 11:47 am

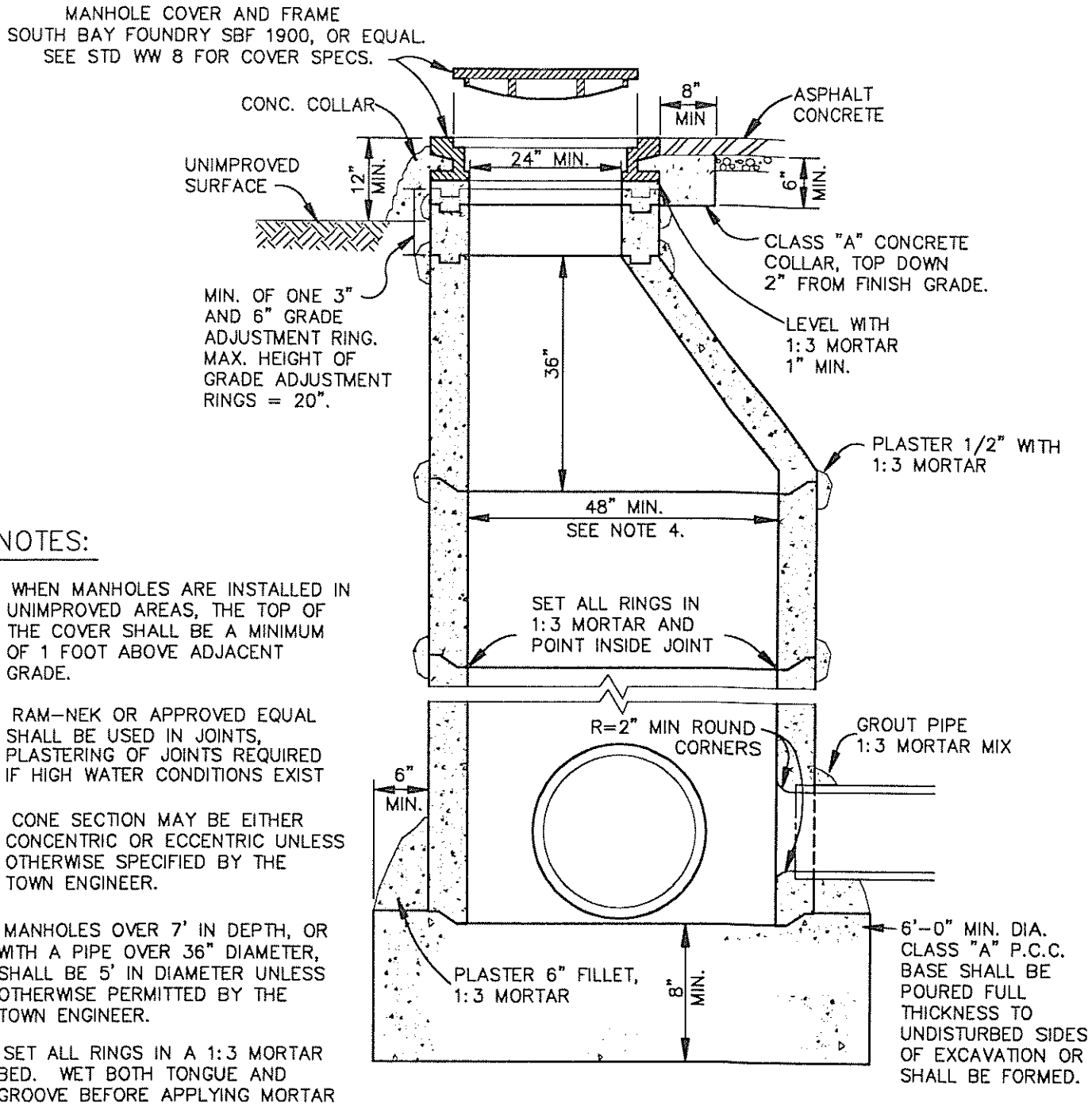

NOTES:

1. WHEN MANHOLES ARE INSTALLED IN UNIMPROVED AREAS, THE TOP OF THE COVER SHALL BE A MINIMUM OF 1 FOOT ABOVE ADJACENT GRADE.
2. RAM-NEK OR APPROVED EQUAL SHALL BE USED IN JOINTS, PLASTERING OF JOINTS REQUIRED IF HIGH WATER CONDITIONS EXIST
3. CONE SECTION MAY BE EITHER CONCENTRIC OR ECCENTRIC UNLESS OTHERWISE SPECIFIED BY THE TOWN ENGINEER.
4. MANHOLES OVER 7' IN DEPTH, OR WITH A PIPE OVER 36" DIAMETER, SHALL BE 5' IN DIAMETER UNLESS OTHERWISE PERMITTED BY THE TOWN ENGINEER.
5. SET ALL RINGS IN A 1:3 MORTAR BED. WET BOTH TONGUE AND GROOVE BEFORE APPLYING MORTAR AND SETTING RING. WIPE INSIDE OF JOINTS SMOOTH AND PLASTER OUTSIDE OF JOINT WITH 1/2" LAYER OF MORTAR.
6. CONSTRUCT ALL FLOW CHANNELS OF PIPE WHEREVER POSSIBLE. AFTER BASE IS POURED, BREAK OUT TOP HALF OF PIPE FLUSH WITH INSIDE FACE OF M.H. WALL AND CONSTRUCT U-SHAPED CHANNEL. MAKE ELEVATION CHANGES GRADUALLY AND DIRECTIONAL CHANGES WITH SMOOTH CURVES. SET RING BASE IN MORTAR.
7. ALL SECTIONS OF MANHOLE MUST BE OF IDENTICAL MAKE AND MANUFACTURER.

TOWN OF YOUNTVILLE	STORM DRAIN MANHOLE				STD. NO. SD 1
	SCALE: NONE	DRAWN: LMM	CHK: PHK	RVSD:	DATE: 1996

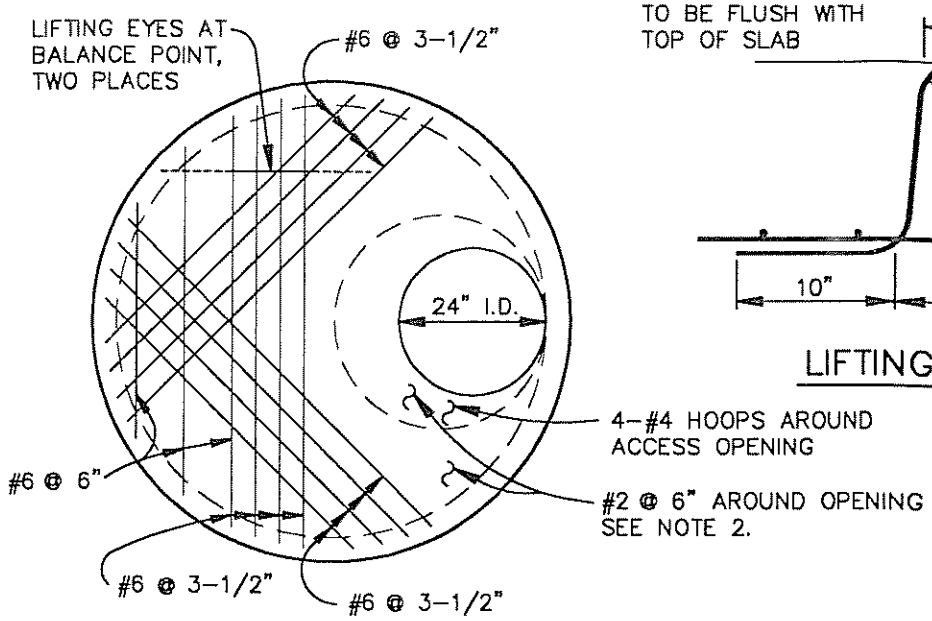

SLAB PLAN

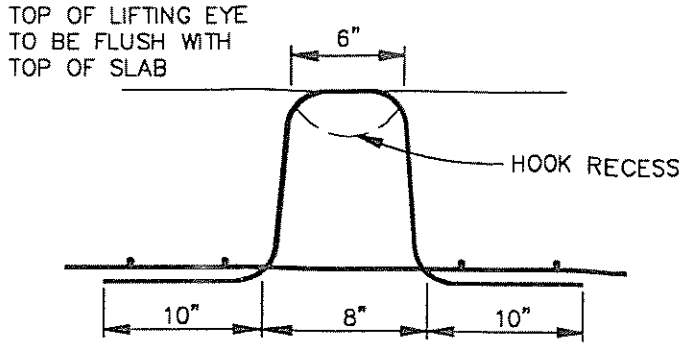

LIFTING EYE DETAIL

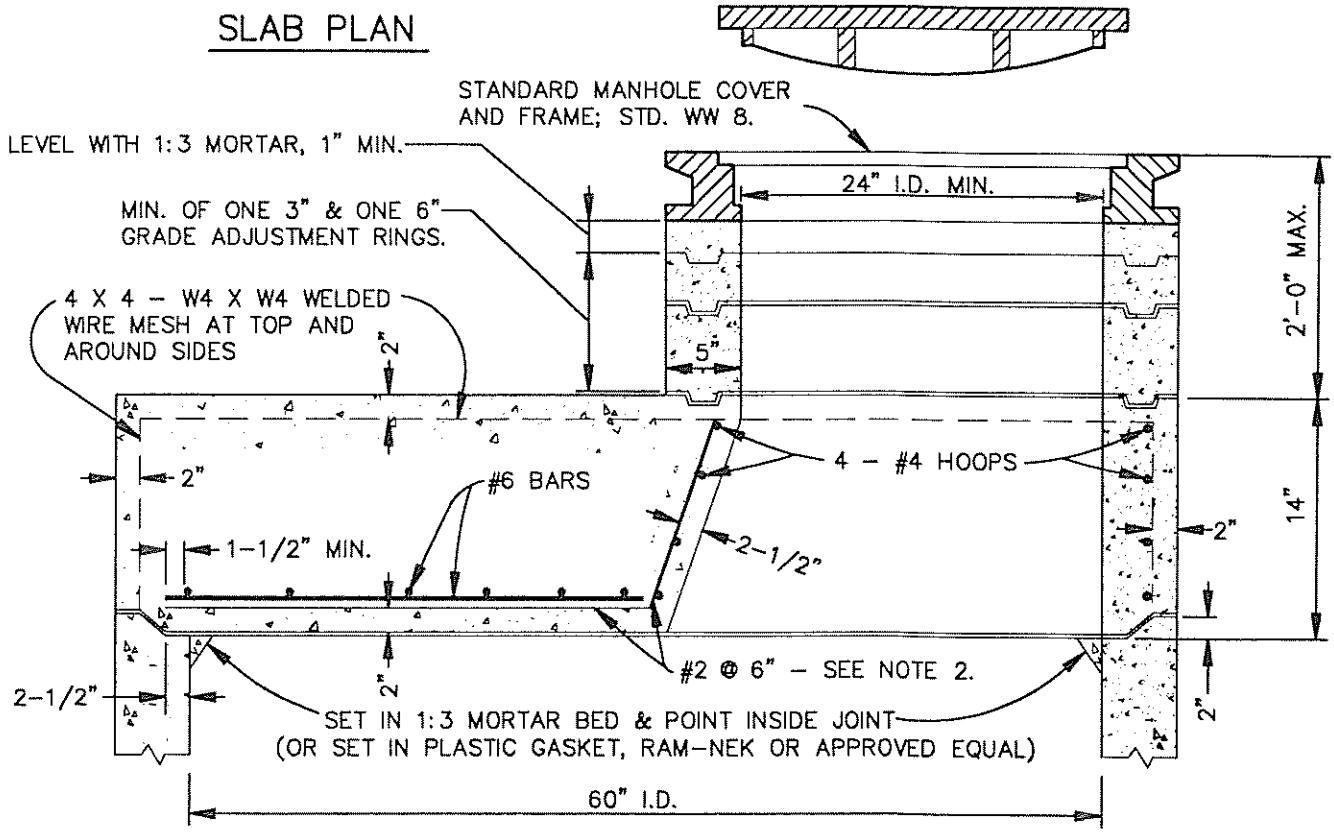

NOTES:

1. FOR DETAILS OF BASE AND BARREL SECTIONS, SEE TOWN STANDARD SD 1.
2. #2 BARS BENT UP AND SPACED 6" O.C. AROUND 24" OPENING. HORIZONTAL LEGS TO FAN OUT EQUALLY SPACED, TO 2-1/2" CLEAR AT EDGE OF SLAB.

TOWN OF YOUNTVILLE	STANDARD PRECAST CONCRETE STORM DRAIN MANHOLE REDUCER SLAB				STD. NO. SD 2
	SCALE: NONE	DRAWN: LMM	CHK: PHK	RVSD:	DATE: 1996

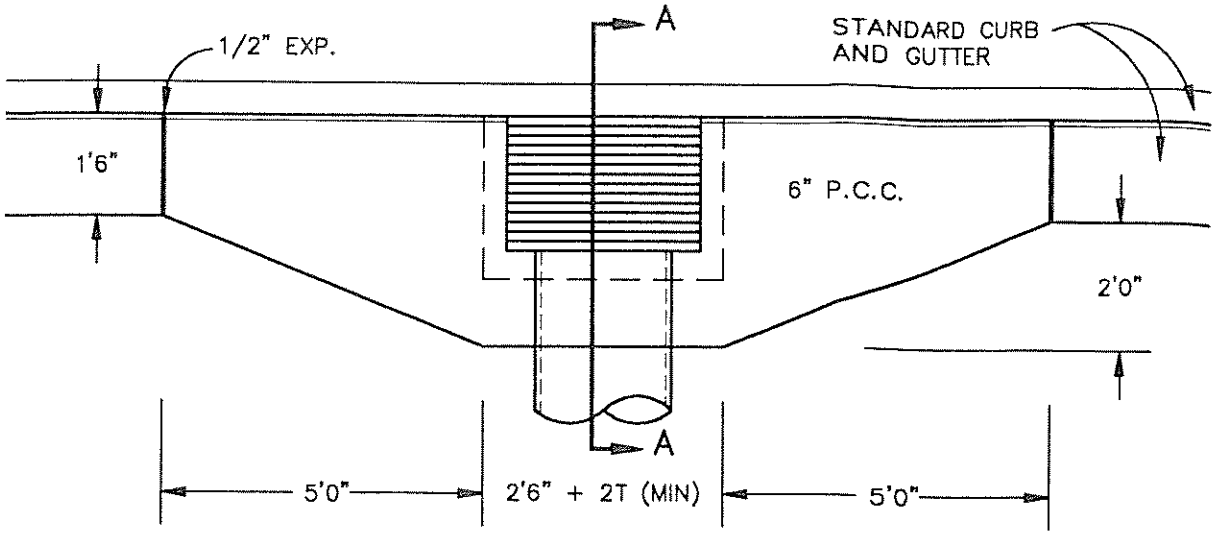

PLAN VIEW

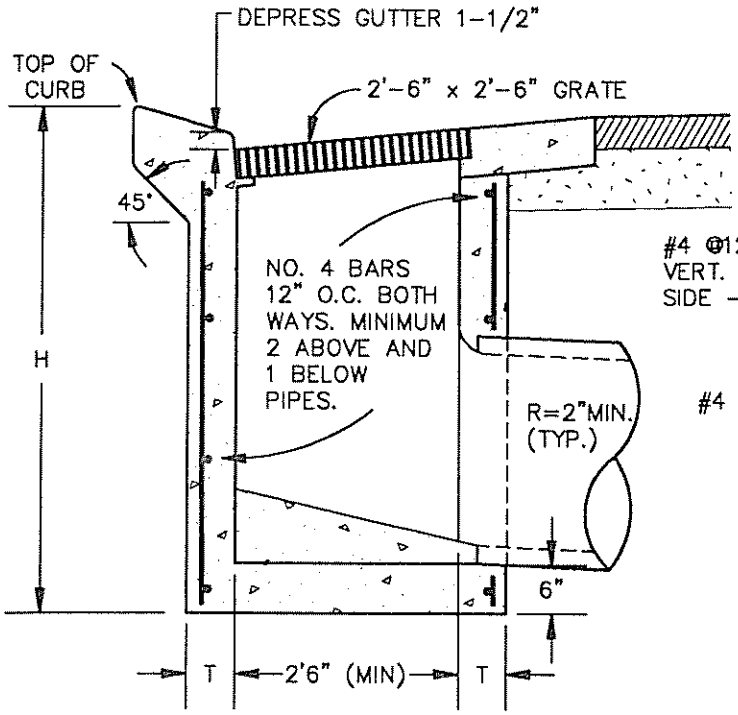

SECTION A-A

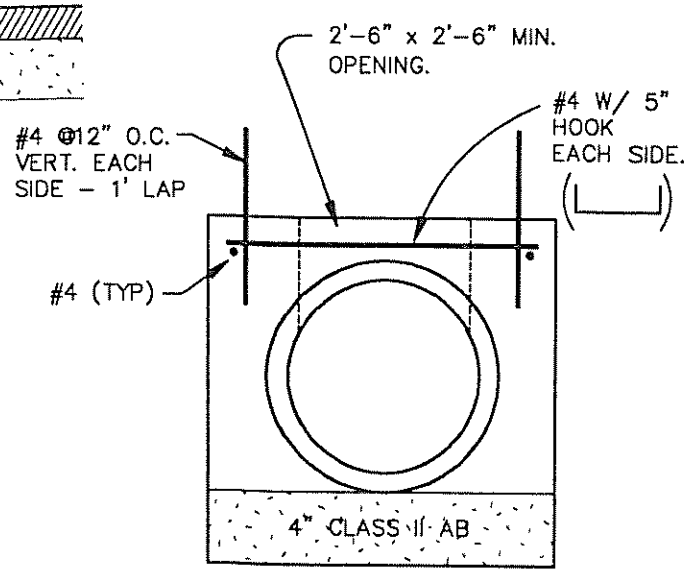

OPTIONAL BASE FOR CONTINUOUS PIPE

NOTES:

1. ALL CONCRETE SHALL BE CLASS "A" (6 SK./CU. YD.)
2. ALL INTERIOR WALLS AND FLOOR SHALL BE ORDINARY SURFACE FINISHED AS PER STATE STDS.
3. ALL WALL FACES SHALL BE FORMED.
4. T = 6" WHEN H < 8'
   T = 8" WHEN H > 8'

TOWN OF YOUNTVILLE	STORM DRAIN INLET TYPE "A"				STD. NO. SD 3
	SCALE: NONE	DRAWN: LMM	CHK: PHK	RVSD:	DATE: 1996

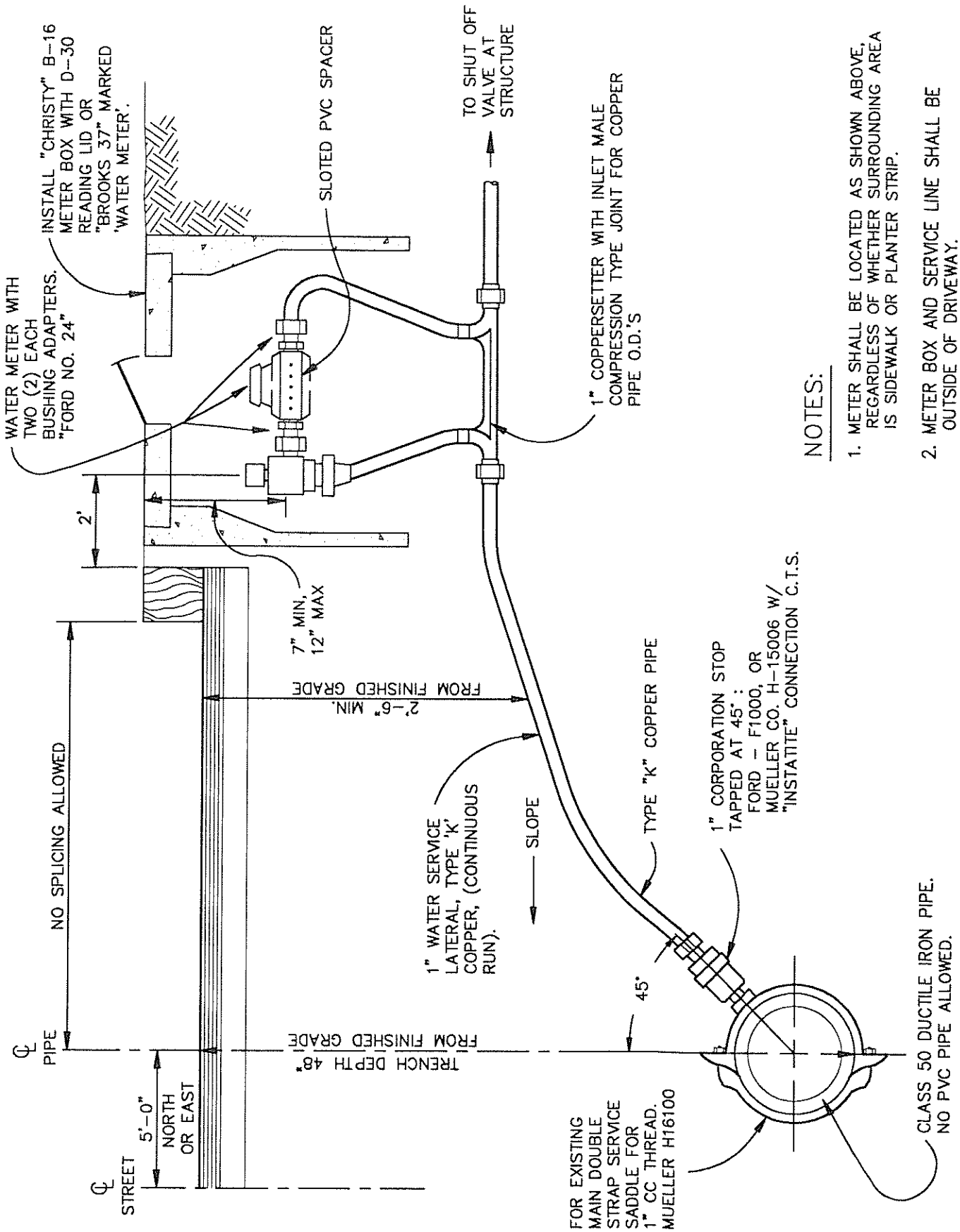

NOTES:

1. METER SHALL BE LOCATED AS SHOWN ABOVE, REGARDLESS OF WHETHER SURROUNDING AREA IS SIDEWALK OR PLANTER STRIP.
2. METER BOX AND SERVICE LINE SHALL BE OUTSIDE OF DRIVEWAY.

TOWN OF YOUNTVILLE	STANDARD 1" WATER SERVICE INSTALLATION				STD. NO. WA 1
	SCALE: NONE	DRAWN: LMM	CHK: PHK	RVSD:	DATE: 1996

TOWN OF YOUNTVILLE

1-1/2", 2" AND LARGER DOMESTIC WATER SERVICE

SCALE: NONE | DRAWN: LMM | CHK: PHK | RVSD:

STD. NO. **WA 2**

DATE: 1996

METER BOX BEHIND CURB IN ALL CASES. WHERE CURB/GUTTER DOES NOT EXIST, SET AS DIRECTED BY TOWN ENGINEER.

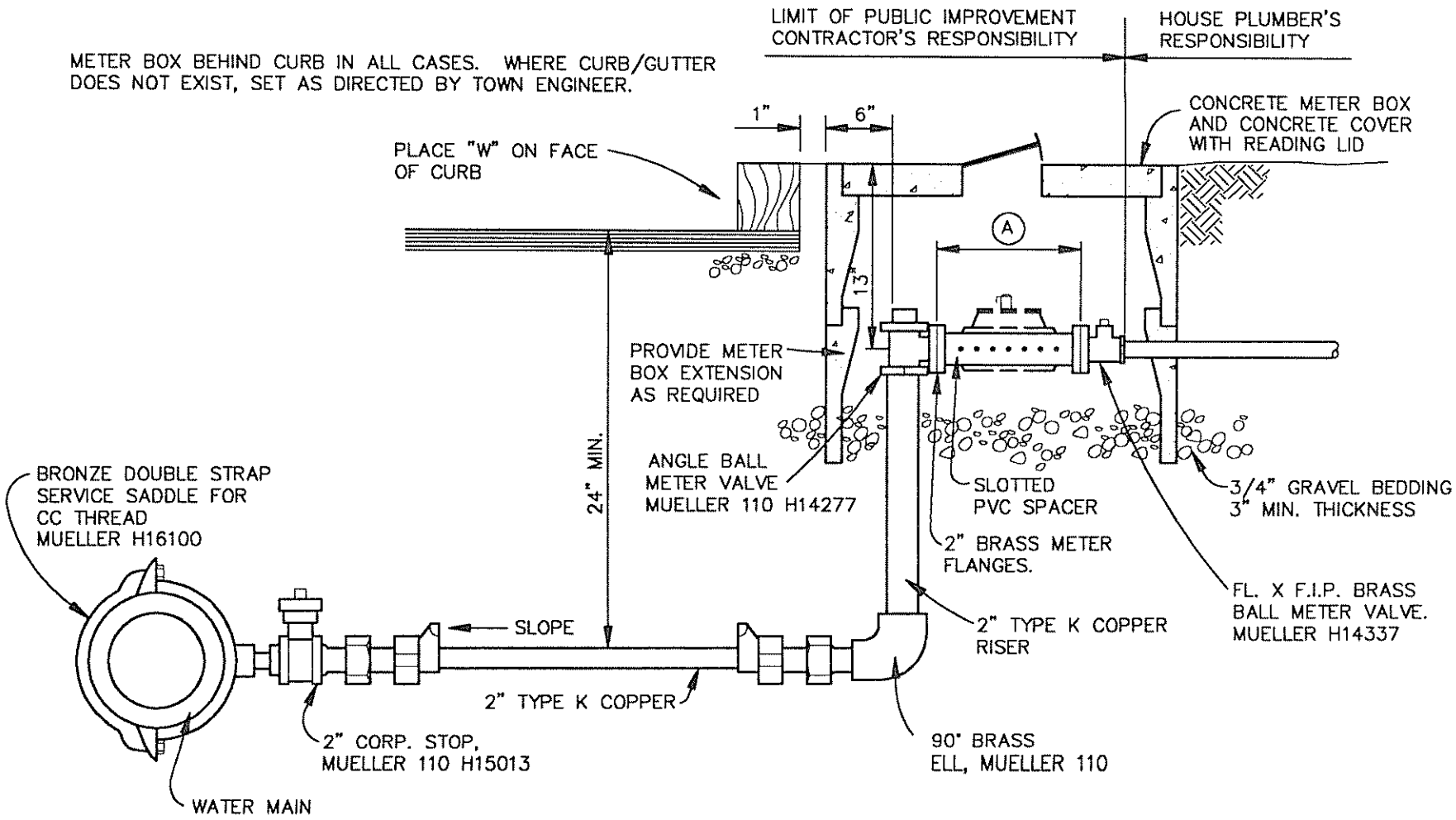

NOTES:

1. METERS PROVIDED AND SET BY WATER DEPARTMENT AT DEVELOPER'S EXPENSE.
2. SERVICE LATERAL TO BE FLOW TESTED PER WATER DEPARTMENT REQUIREMENTS PRIOR TO FINAL ACCEPTANCE.
3. ON NEW SYSTEMS, SERVICE LATERALS TO BE TESTED TO ANGLE STOP AT SAME PRESSURE REQUIRED IN MAIN LINE TESTING.
4. IN TRAFFIC LOAD AREAS, BOX AND STEEL COVER TO BE SET FLUSH WITH SURFACE.

SERVICE	CHRISTY METER BOX	LID		A
		NON-TRAFFIC	TRAFFIC	
1 1/2"	B-36	E70	61G70	13" (100 G.P.M.)
2"	B-48	M75	61G75	17" (160 G.P.M.)

TOWN OF YOUNTVILLE

FIRE HYDRANT INSTALLATION

SCALE: NONE | DRAWN: LMM | CHK: PHK | RVSD: JWM | DATE: 2008

STD. NO. **WA 3**

NOTES:

1. PLACE ONE BLUE PAVEMENT MARKER PER HYDRANT 24" FROM STREET CENTERLINE TOWARD HYDRANT.
2. CURB SHALL BE PAINTED RED FOR A TOTAL LENGTH OF 20', CENTERED AT THE HYDRANT.
3. ALL CONCRETE CLASS "A" (6 SACK).
4. WHERE NO SIDEWALK EXISTS, A 24" x 24" x 6" THICK CONCRETE PAD SHALL BE POURED AROUND THE BREAK-OFF RISER AT THE SAME RELATIVE ELEVATION AS THE SIDEWALK.
5. RESIDENTIAL FIRE HYDRANTS WILL HAVE ONE 2 1/2" AND ONE 4 1/2" OUTLET. COMMERCIAL FIRE HYDRANTS WILL HAVE TWO 2 1/2" AND ONE 4 1/2" OUTLETS.
6. VERIFY FIRE PROTECTION REQUIREMENTS WITH THE TOWN FIRE DEPT.

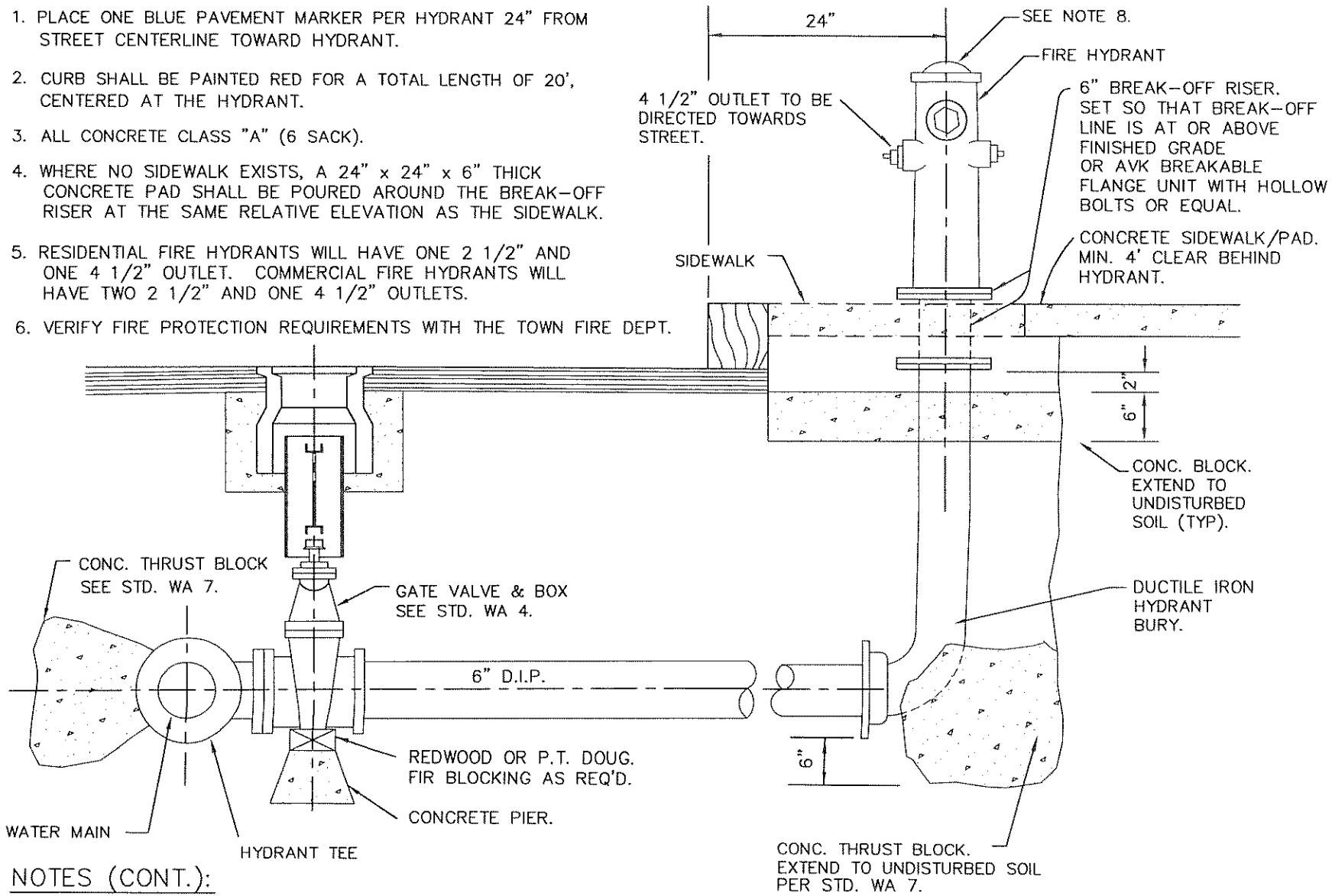

NOTES (CONT.):

7. INSTALL HYDRANTS 10' CLEAR OF DRIVEWAYS.
8. CIRCULAR TOPS AND CAPS OF FIRE HYDRANTS SHALL BE PAINTED ACCORDING TO THEIR GPM: 0-499 GPM-RED; 500-999 GPM-ORANGE; 1,000+ GPM-FOREST GREEN.
9. ALL FIRE HYDRANTS SHALL BE PAINTED CHROME YELLOW.

TOWN OF YOUNTVILLE

STANDARD VALVE & VALVE BOX WITH RISER

SCALE: NONE | DRAWN: LMM | CHK: PHK | RVSD: | DATE: 1996

STD. NO. WA 4

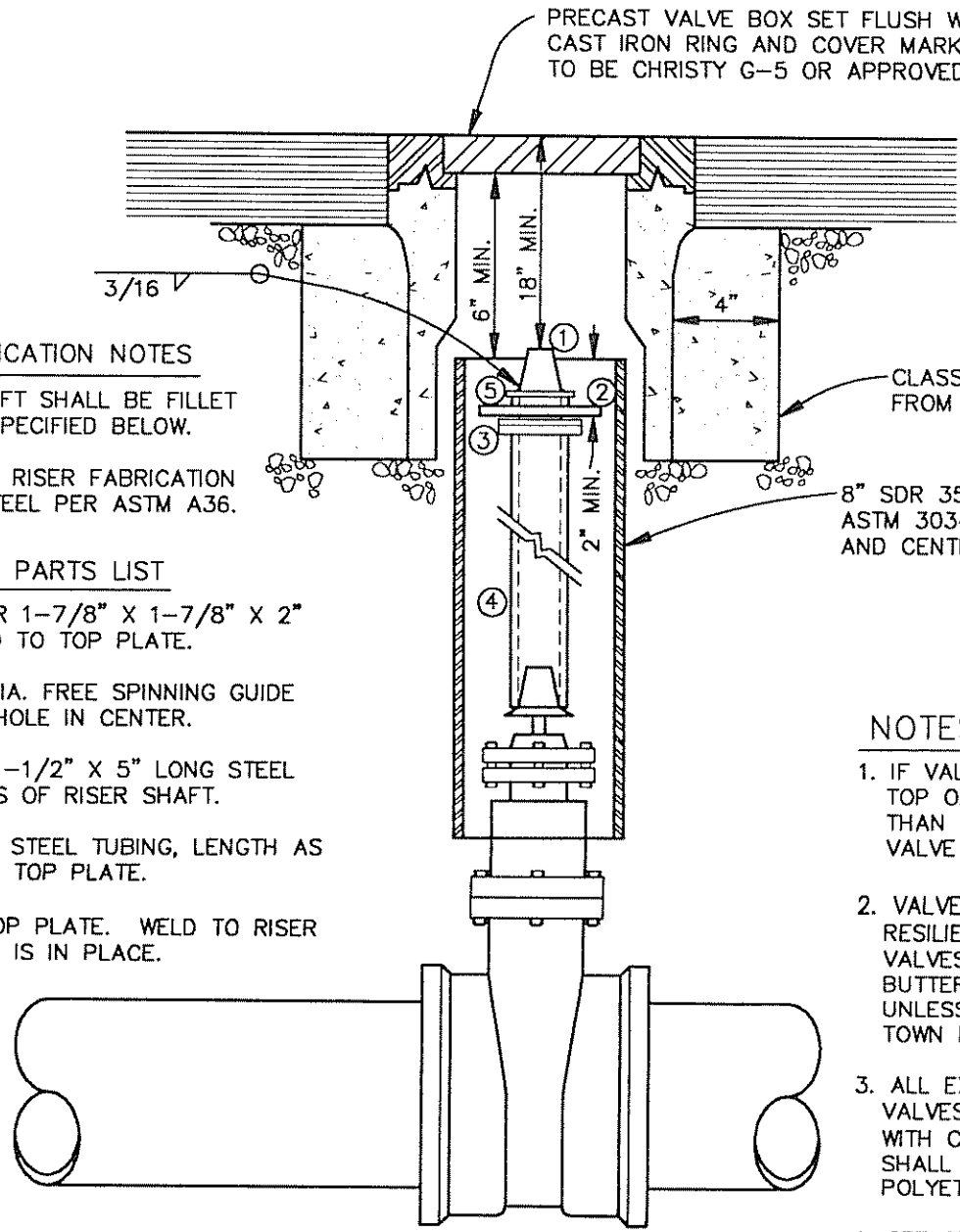

STEM EXTENSION FABRICATION NOTES

1. ALL WELDS TO RISER SHAFT SHALL BE FILLET WELD ALL AROUND. AS SPECIFIED BELOW.
2. ALL STEEL REQUIRED FOR RISER FABRICATION SHALL BE STRUCTURAL STEEL PER ASTM A36.

VALVE STEM EXTENSION PARTS LIST

① VALVE OPERATING NUT OR 1-7/8" X 1-7/8" X 2" HIGH, SOLID STEEL WELDED TO TOP PLATE.

② 3/16" THICK X 7-1/2" DIA. FREE SPINNING GUIDE PLATE WITH 3-5/8" DIA. HOLE IN CENTER.

③ TWO 3/16" X 1-1/2" X 1-1/2" X 5" LONG STEEL ANGLE WELD TO TWO SIDES OF RISER SHAFT.

④ 2-1/2" X 3/16" SQUARE STEEL TUBING, LENGTH AS REQUIRED. EDGE WELD TO TOP PLATE.

⑤ 3" X 3" X 1/4" STEEL TOP PLATE. WELD TO RISER SHAFT AFTER GUIDE PLATE IS IN PLACE.

NOTES:

1. IF VALVE IS INSTALLED SO THAT THE TOP OF THE OPERATING NUT IS LESS THAN 18" BELOW FINISHED GRADE, THE VALVE STEM RISER IS NOT REQUIRED.
2. VALVES 2" THROUGH 10" SHALL BE RESILIENT WEDGE GATE VALVES AND VALVES 12" AND LARGER SHALL BE BUTTERFLY VALVES (SEE STD. WA 21), UNLESS OTHERWISE APPROVED BY THE TOWN ENGINEER.
3. ALL EXTERNAL BOLTS AND NUTS ON VALVES SHALL BE NO.5 GRADED BOLTS WITH COATING, AND VALVE ASSEMBLY SHALL BE WRAPPED WITH 8 MIL POLYETHYLENE SECURED WITH TAPE.
4. SEE GENERAL CONSTRUCTION NOTES.

TOWN OF YOUNTVILLE

TEMPORARY BLOW OFF WITH MAIN LINE VALVE

SCALE: NONE | DRAWN: LMM | CHK: PHK | RVSD:

STD. NO. **WA 5**

DATE: 1996

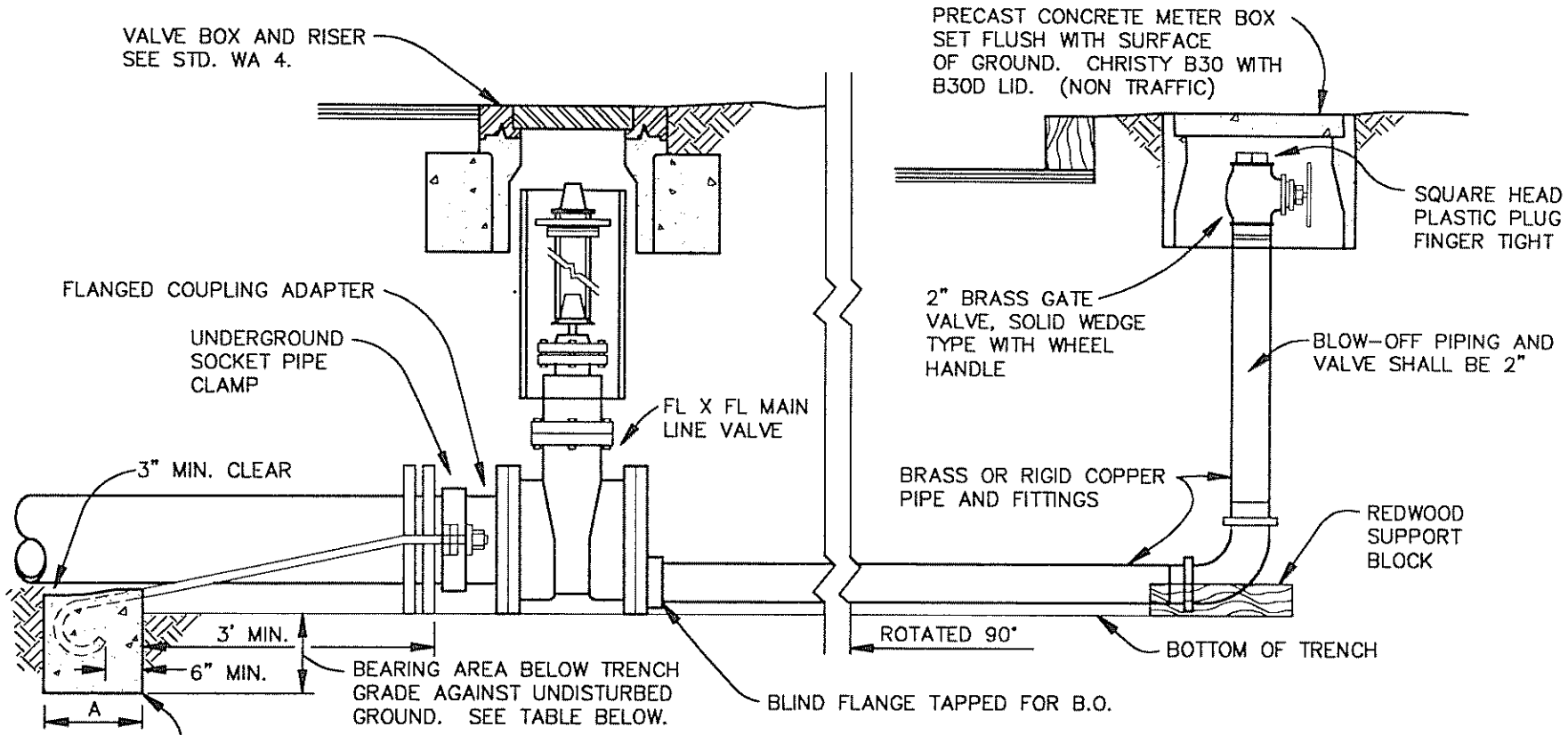

ELEVATION

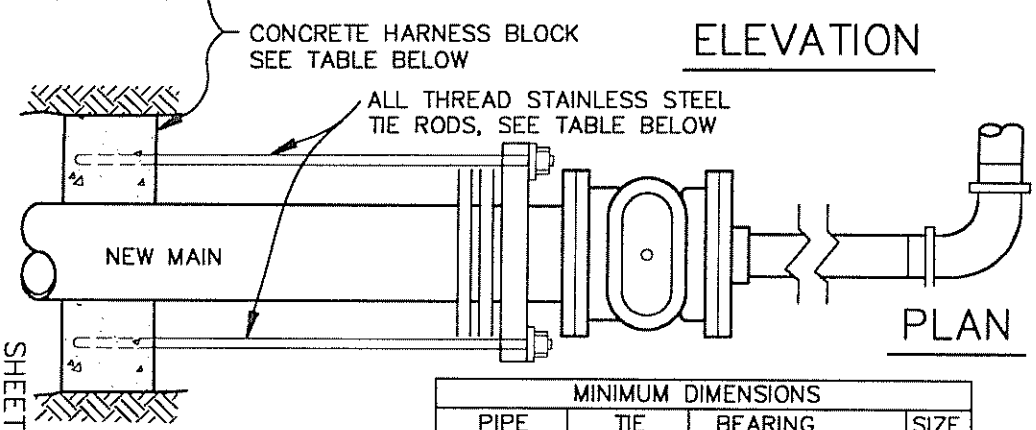

PLAN

CONCRETE SHALL EXTEND AT LEAST TO THE UNDISTURBED EARTH AT BOTH SIDES OF THE TRENCH.

MINIMUM DIMENSIONS				
PIPE SIZE	TIE RODS	BEARING AREA	A	SIZE B.O.
6"	5/8"	4 SQ. FT.	2'	2"
8"	3/4"	7 SQ. FT.	3'	2"
12"	1-1/8"	16 SQ. FT.	3'	2"
OVER 12"	BY THE DESIGN ENGINEER			

NOTES:

1. TO BE INSTALLED IN CASES WHERE MAIN MAY BE EXTENDED IN FUTURE AND NO VALVE EXISTS WITHIN 250 FEET.
2. BLOW-OFF SHALL NOT BE INSTALLED WITHIN THE TRAVELED WAY. IF THE MAIN ENDS WITHIN STREET AREA, BLOW-OFF TO BE EXTENDED TO AN AREA OUTSIDE OF THE TRAVELED WAY.
3. FOR 12" PIPE SIZE OR LARGER, USE FL X FL MAIN LINE VALVE PER STD. WA 4 & FL X MJ ADAPTER & MJ PLUG TAPPED AT BOTTON FOR B.O.
4. ALL EXPOSED THREADS SHALL BE PAINTED WITH BITUMASTIC PAINT OR APPROVED SUBSTITUTE AFTER NUTS ARE TIGHTENED.

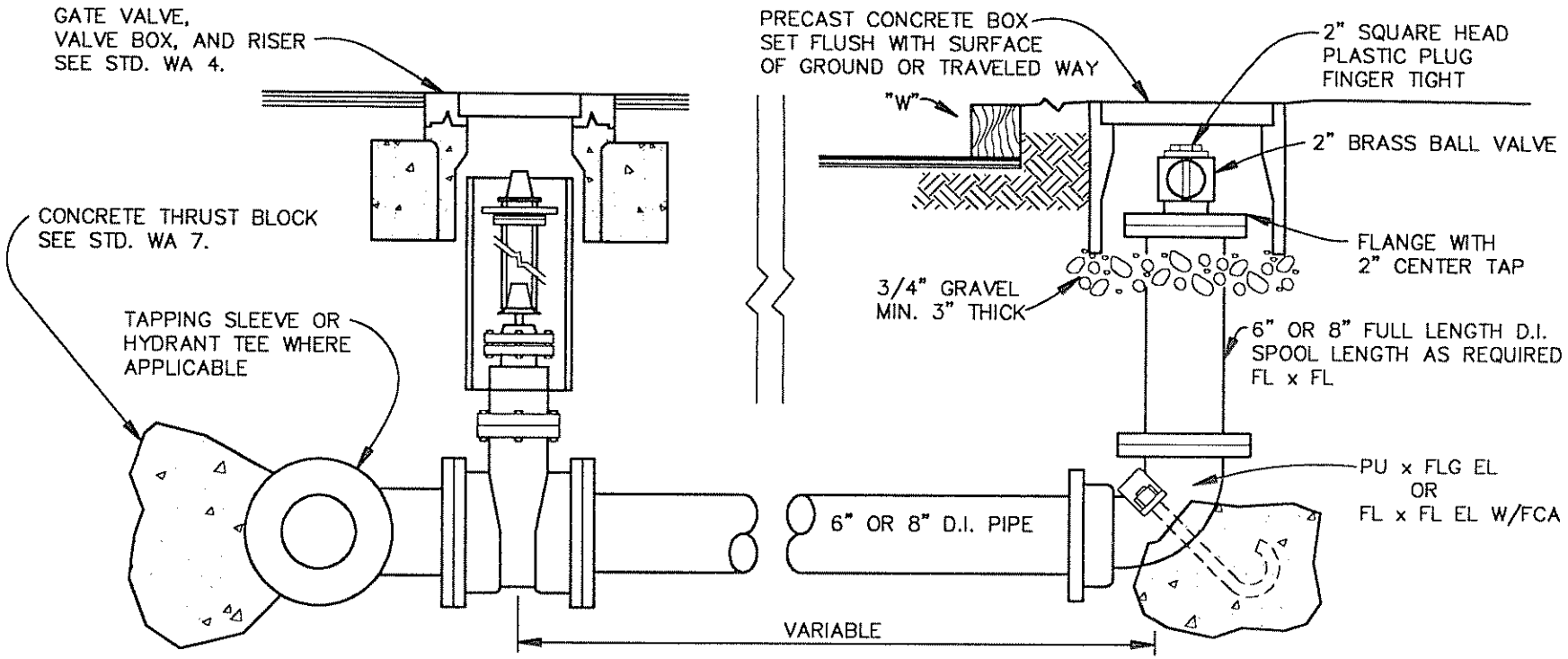

NOTES:

1. SEE GENERAL CONSTRUCTION NOTES.
2. ALL EXPOSED THREADS SHALL BE PAINTED WITH BITUMASTIC PAINT OR APPROVED SUBSTITUTE, AFTER NUTS ARE TIGHTENED. DIP TO BE WRAPPED WITH 8 MIL POLYETHYLENE AND SECURED W/TAPE.
3. BOX SHALL BE CHRISTY B40 WITH B40-61G LID OR EQUAL.

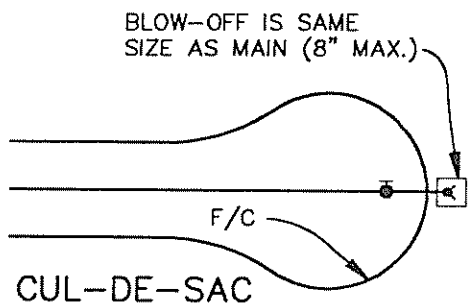

CUL-DE-SAC

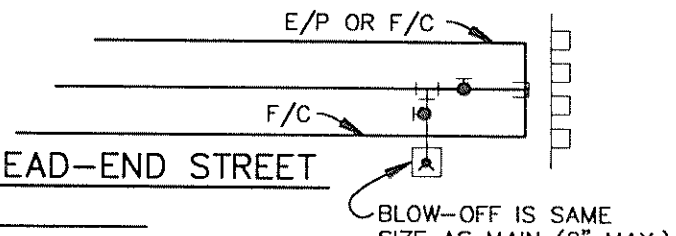

DEAD-END STREET

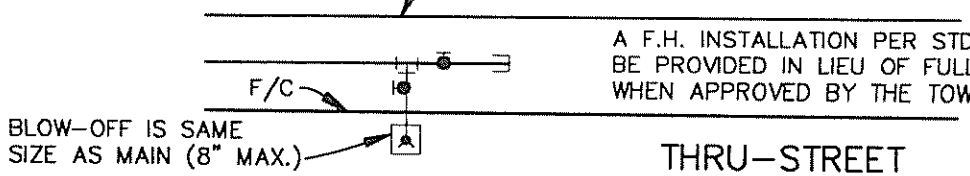

A F.H. INSTALLATION PER STD. WA 3 MAY BE PROVIDED IN LIEU OF FULL SIZE BLOW-OFF WHEN APPROVED BY THE TOWN ENGINEER

THRU-STREET

TOWN OF YOUNTVILLE

6" AND 8" BLOW OFF

SCALE: NONE | DRAWN: LMM | CHK: PHK | RVSD:

STD. NO. WA 5

DATE: 1996

SHEET 2 OF 2

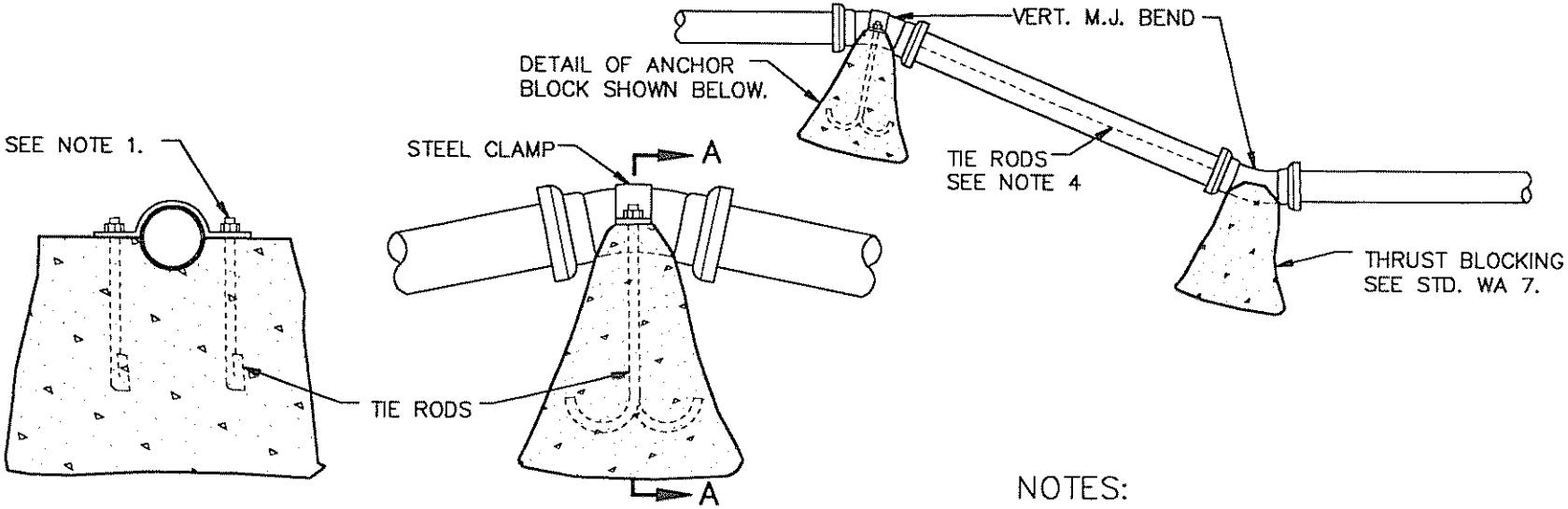

SECTION "A–A"

ELEVATION

TYPICAL CONCRETE ANCHOR BLOCK FOR VERTICAL BEND

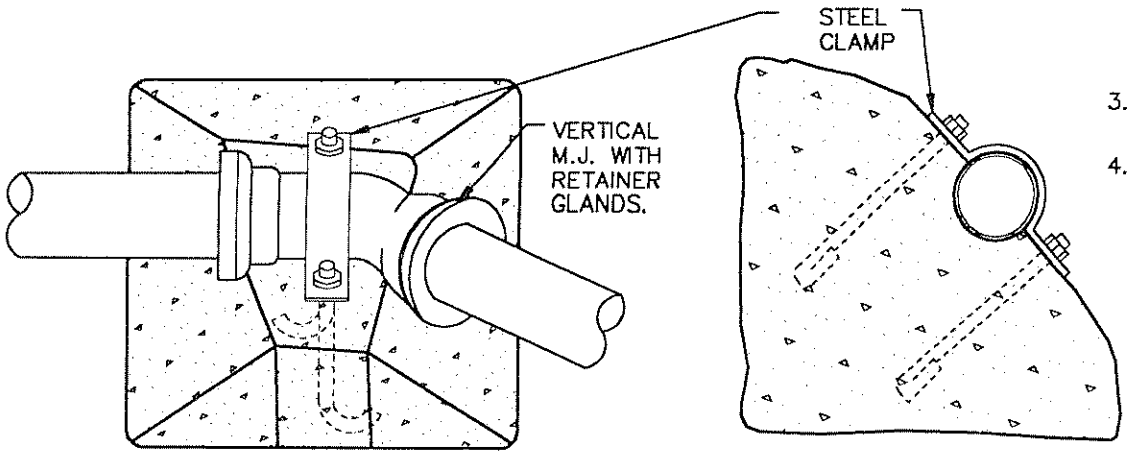

TYPICAL CONCRETE ANCHOR BLOCK FOR COMBINATION HORIZONTAL–VERTICAL BEND

NOTES:

1. ALL EXPOSED THREADS SHALL BE PAINTED WITH BITUMASTIC OR APPROVED EQUAL, AFTER NUTS ARE TIGHTENED.
2. CONCRETE ANCHOR BLOCKS SHALL BE INSTALLED BY THE CONTRACTOR TO WITHSTAND A THRUST PRODUCED BY THE TEST PRESSURE PLUS 50 P.S.I. MINIMUM DIMENSIONS FOR TIE RODS AND CLAMPS ARE LISTED IN THE TABLE BELOW.
3. USE MECHANICAL JOINT RETAINER GLANDS AT ALL FITTINGS.
4. FOR PVC PIPE, TIE RODS (THREADED FULL LENGTH) BETWEEN FITTINGS (MIN. 2 REQD.) MAY BE USED IN LIEU OF RETAINING GLANDS.

PIPE SIZE	TIE RODS	STEEL CLAMPS
6"	5/8"	3" X 1/4"
8"	3/4"	3–1/4" X 1/4"
12"	1–1/4"	4" X 1/2"
14"	1–1/4"	4" X 1/2"
16"	1–3/8"	5" X 1/2"

TOWN OF YOUNTVILLE

CONCRETE ANCHOR BLOCKS FOR VERTICAL BENDS

SCALE: NONE | DRAWN: LMM | CHK: PHK | RVSD:

DATE: 1996

STD. NO. WA 6

TOWN OF YOUNTVILLE

CONCRETE THRUST BLOCK

STD. NO. WA 7

SCALE: NONE | DRAWN: LMM | CHK: PHK | RVSD: | DATE: 1996

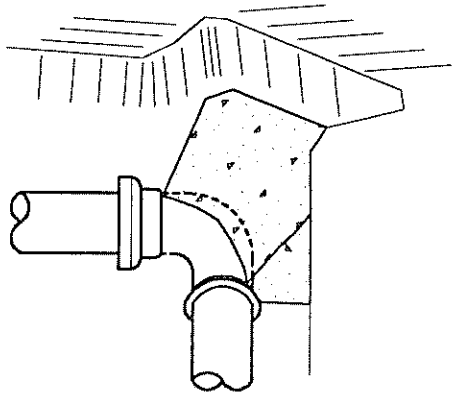

BEND

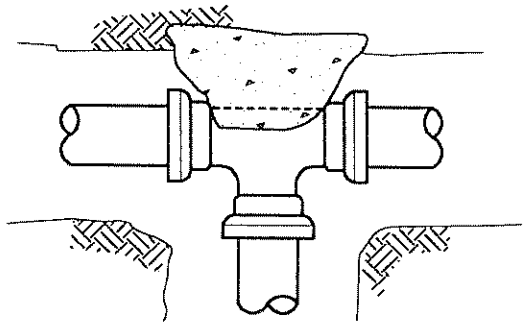

TEE

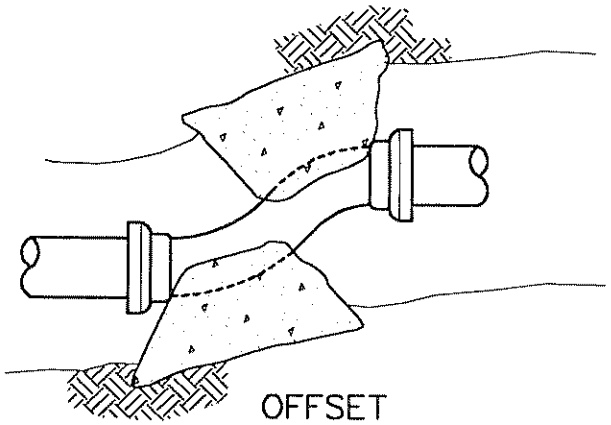

OFFSET

TYPICAL CONC. BLOCKING SHOWN IN PERSPECTIVE

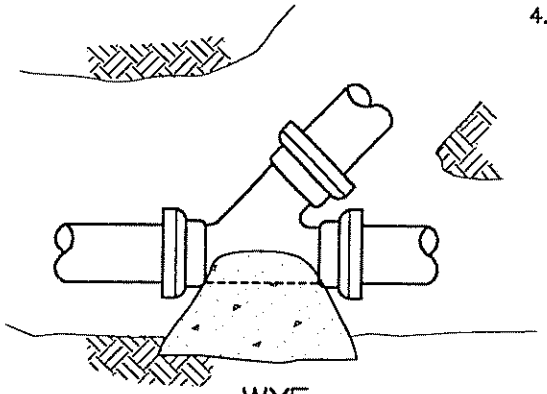

WYE

NOTES:

1. SAFE BEARING LOAD OF SOIL FOR HORIZONTAL THRUST SHALL NOT BE EXCEEDED.
2. CONCRETE BLOCKING, CAST-IN-PLACE, TO EXTEND FROM BELLS OF FITTINGS TO UNDISTURBED SOIL AND ENTIRE BEARING AREA MUST BE AGAINST UNDISTURBED SOIL.
3. IN USING THE THRUST BLOCKING TABLE BELOW, ASSUME 2000 P.S.F. BEARING CAPACITY UNLESS OTHERWISE SHOWN ON THE PLANS. THE DESIGN ENGINEER SHALL SPECIFY THRUST BLOCKING REQUIREMENTS FOR ALL OTHER SOIL BEARING CONDITIONS.
4. FOR PLUGGED LEG(S) OF TEE OR CROSS, USE HARNESS TYPE BLOCKING AS SHOWN ON STD. WA 15 AND CONCRETE BLOCKING INDICATED IN TABLE BELOW.

MIN. REQ'D BEARING AREA IN SQ. FT. PER 100 P.S.I. TEST PRESSURE *						
PIPE SIZE	SOIL BEARING CAPACITY	HARNESS BLOCKS	TEES & DEAD ENDS	90° BENDS	45° BENDS	22-1/2° BENDS
6"	1000	4	4	6	3	2
	2000	2	2	3	2	1
8"	1000	7	7	10	5	3
	2000	4	4	5	3	2
12"	1000	16	16	22	12	6
	2000	8	8	11	6	3

* MULTIPLY NO. IN TABLE BY TEST PRESSURE & DIVIDE BY 100.

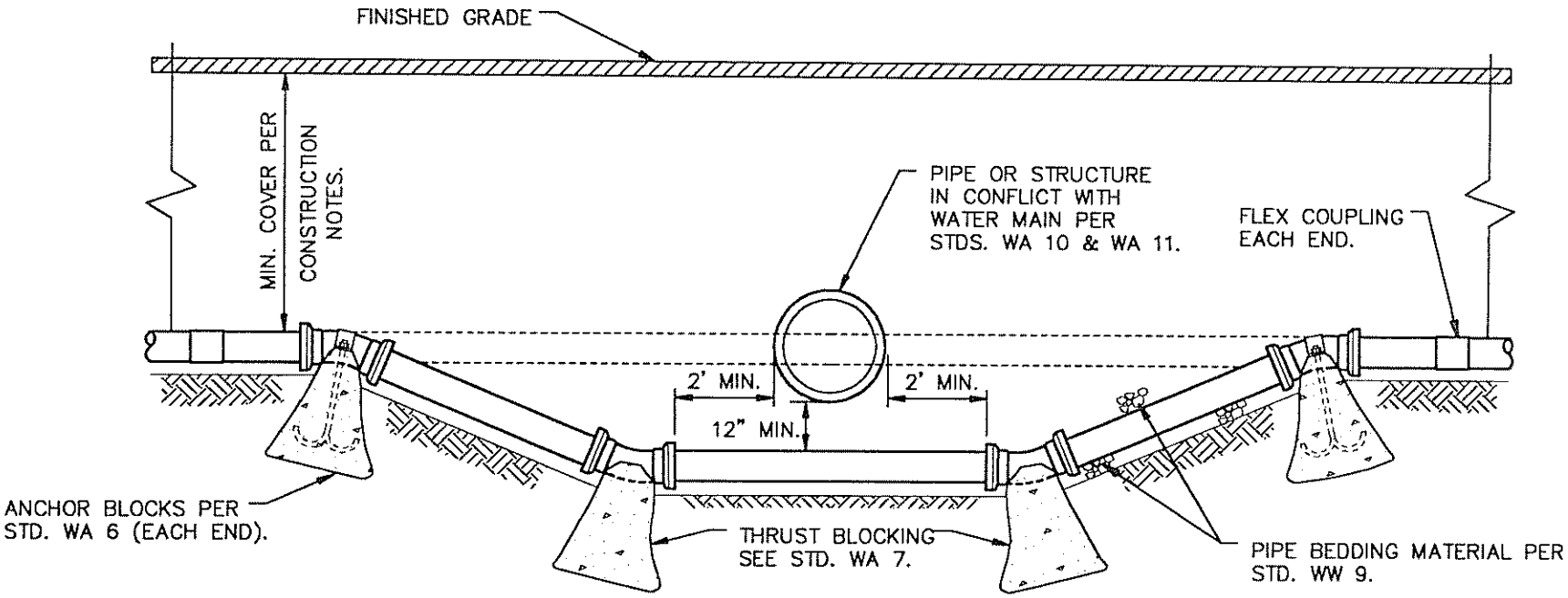

NOTES:

1. ALL PIPE & FITTINGS SHALL BE DUCTILE IRON & SHALL BE WRAPPED IN POLYETHELENE PER TOWN STD. CONSTRUCTION SPECIFICATIONS.
2. ONLY MECHANICAL JOINT FITTINGS WITH RETAINER GLANDS OR FLANGED FITTINGS MAY BE USED.
3. ALL BENDS SHALL BE 45° OR 22-1/2° FITTINGS.

WATER MAIN LOWERING DETAIL

TOWN OF YOUNTVILLE

WATER MAIN LOWERING DETAIL

SCALE: NONE | DRAWN: LMM | CHK: PHK | RVSD:

STD. NO. WA 8

DATE: 1996

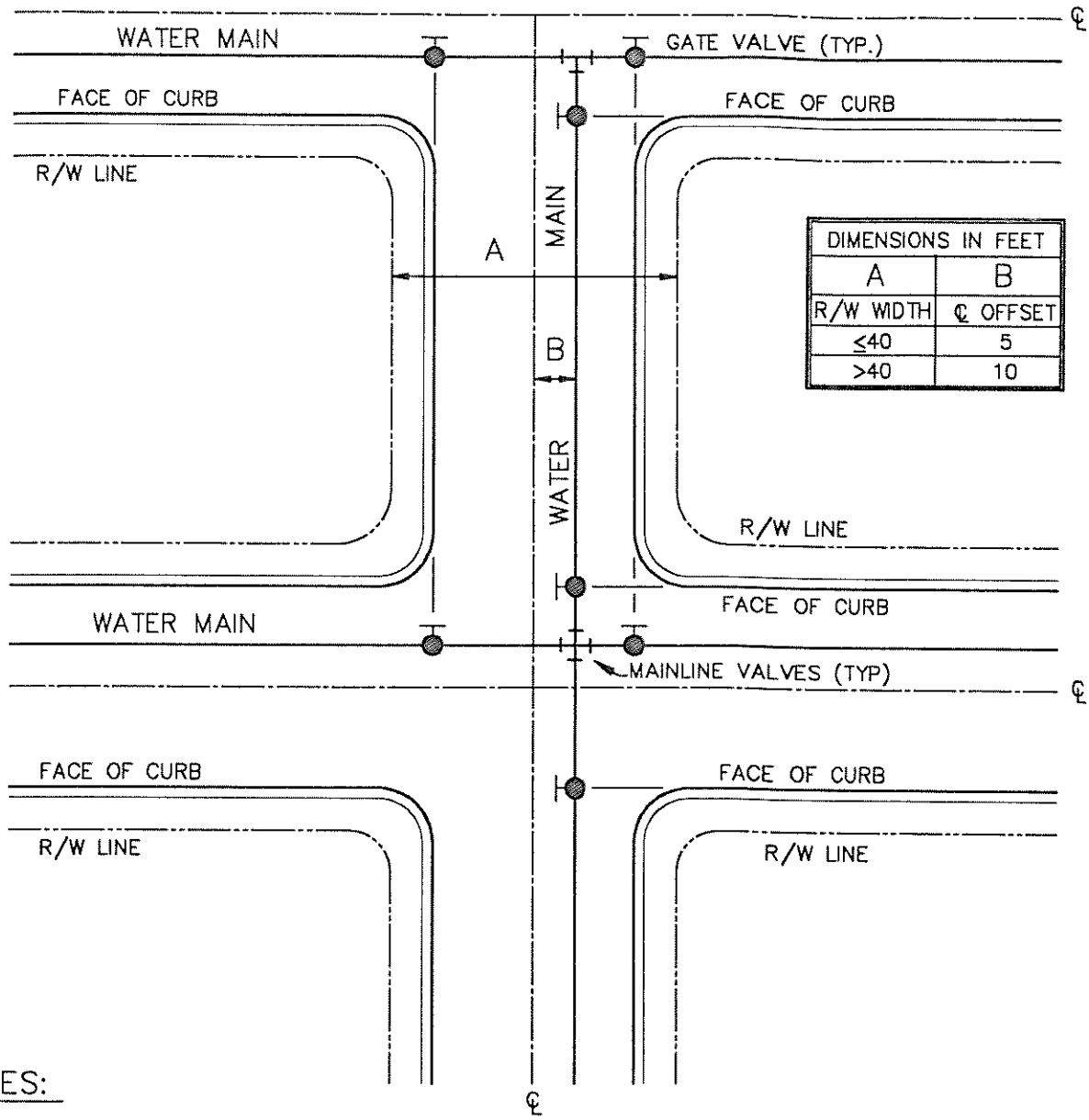

DIMENSIONS IN FEET	
A	B
R/W WIDTH	℄ OFFSET
≤40	5
>40	10

NOTES:

1. WATER MAINS SHALL BE LOCATED PARALLEL TO STREET CENTERLINES AT THE OFFSET SHOWN ABOVE UNLESS CONFLICTS WITH OTHER UNDERGROUND FACILITIES CANNOT BE AVOIDED. NON-STANDARD ALIGNMENTS SHALL BE APPROVED BY THE TOWN ENGINEER PRIOR TO INSTALLATION.
2. MAINLINE VALVES, EXCEPT HYDRANT VALVES AND TAPPING VALVES, SHALL BE ON FACE OF CURB EXTENDED WHERE FEASIBLE.
3. A MINIMUM OF THREE (3) MAINLINE VALVES ARE REQUIRED FOR "T" INTERSECTIONS AND FOUR (4) VALVES ARE REQUIRED FOR CROSS INTERSECTIONS, UNLESS OTHERWISE APPROVED BY THE TOWN ENGINEER.
4. MAINLINE VALVES SHALL BE REQUIRED TO ISOLATE FIRE HYDRANTS, BOTH PUBLIC AND PRIVATE, INTO SEPARATELY VALVED MAINLINE SECTIONS, AND SHALL HAVE A MAX. SPACING OF 500'.
5. VALVES WITHIN 250 FEET OF AN INTERSECTION MAY BE CONSIDERED INTERSECTION VALVES.

TOWN OF YOUNTVILLE	TYPICAL LOCATION OF WATER MAINS AND MAINLINE VALVES				STD. NO. WA 9
	SCALE: NONE	DRAWN: LMM	CHK: PHK	RVSD:	DATE: 1996

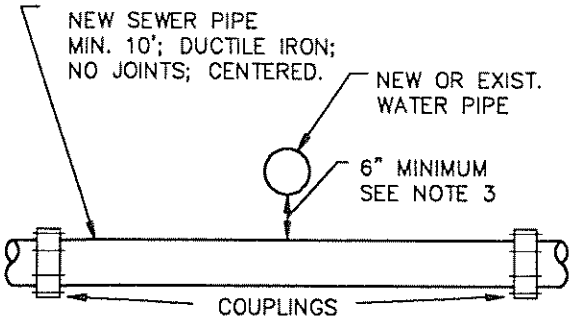

NEW SEWER UNDER NEW OR EXISTING WATER

CASE 1

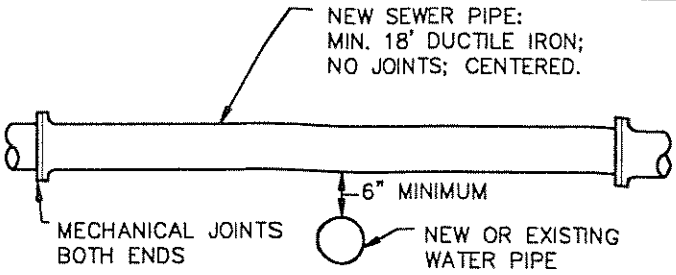

NEW SEWER OVER NEW OR EXISTING WATER

CASE 2

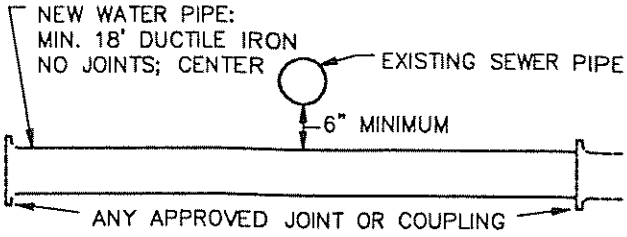

NEW WATER UNDER EXISTING SEWER

CASE 4

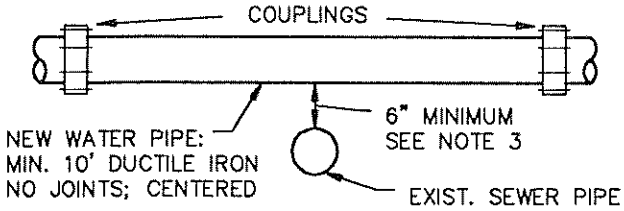

NEW WATER OVER EXISTING SEWER

CASE 3

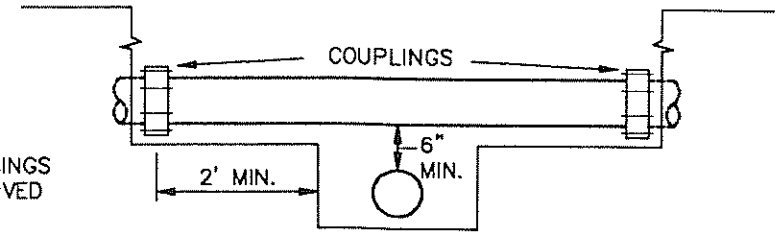

NEW PIPE UNDER EXISTING

CASE 5 – SEE NOTE 4

NOTES:

1. THIS STANDARD APPLIES TO PIPES UP TO AND INCLUDING 16" DIAMETER. ALL CROSSINGS OF LARGER DIAMETER SHALL BE AS APPROVED BY THE TOWN ENGINEER.
2. ALL NEW DUCTILE IRON SHALL BE WRAPPED IN POLYETHYLENE PER TOWN CONSTRUCTION SPECIFICATIONS.
3. WHERE SEWER CROSSES BELOW A WATER MAIN, WITH 1' OR MORE VERTICAL CLEARANCE, NO SPECIAL INSTALLATION IS REQUIRED.
4. "NEW PIPE UNDER EXISTING–CASE 5" SHALL BE USED WHEN THE EXISTING PIPE HAS A JOINT OVER OR WITHIN 2' OF THE NEW TRENCH.
5. ANY PIPE–PIPE CROSSING WITH LESS THAN 6" VERTICAL CLEARANCE SHALL NOT BE INSTALLED WITHOUT APPROVAL OF THE TOWN ENGINEER.
6. FOR WATER MAIN LOWERING DETAIL, SEE TOWN STANDARD WA 8.
7. SEE TOWN'S APPROVED LIST FOR APPROVED COUPLINGS.

TOWN OF YOUNTVILLE	PIPE – PIPE CROSSING DETAIL				STD. NO. WA 10
	SCALE: NONE	DRAWN: LMM	CHK: PHK	RVSD:	DATE: 1996

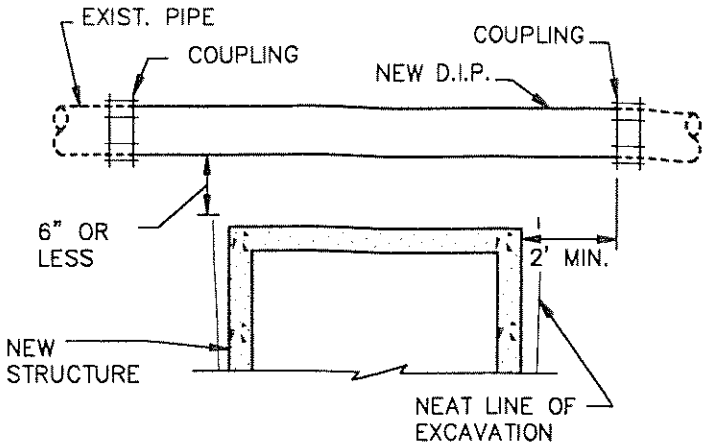

NEW STRUCTURE UNDER EXIST.

TYPE C

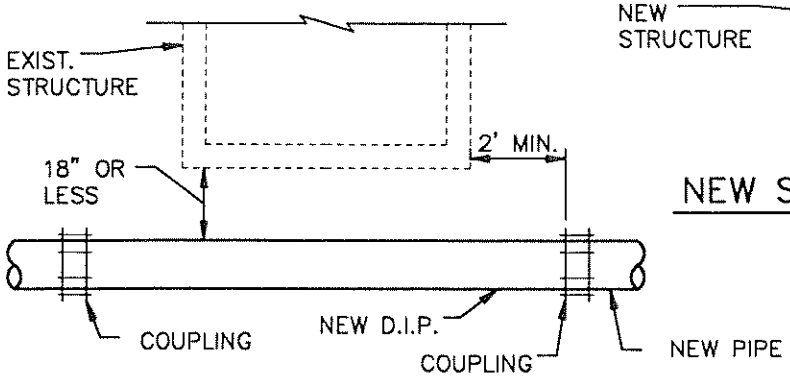

NEW PIPE UNDER EXISTING

TYPE A

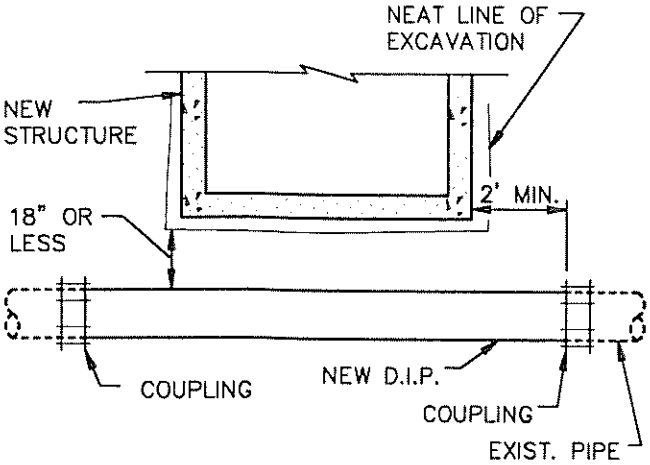

NEW PIPE OVER EXISTING

TYPE B

NOTES:

1. THIS STD. APPLIES TO PIPES UP TO AND INCLUDING 16" DIAMETER. ALL CROSSINGS INVOLVING PIPES OF LARGER DIAMETER SHALL BE AS APPROVED BY THE TOWN ENGINEER.
2. WHEN PIPES CROSS WITHIN THE DIMENSIONS SHOWN, A NEW DUCTILE IRON PIPE SECTION SHALL BE INSTALLED AS DETAILED.
3. ALL DUCTILE IRON PIPE SHALL BE ENCASED IN POLYETHYLENE FILM IN TUBE FORM.
4. ANY TYPE "A" INSTALLATION REQUIRING MORE THAN ONE LENGTH OF PIPE SHALL BE ENCASED PER STD. WA 18.
5. SEE TOWN APPROVED LIST FOR APPROVED COUPLINGS.

TOWN OF YOUNTVILLE	PIPE- STRUCTURE CROSSING DETAIL				STD. NO. WA 11
	SCALE: NONE	DRAWN: LMM	CHK: PHK	RVSD:	DATE: 1996

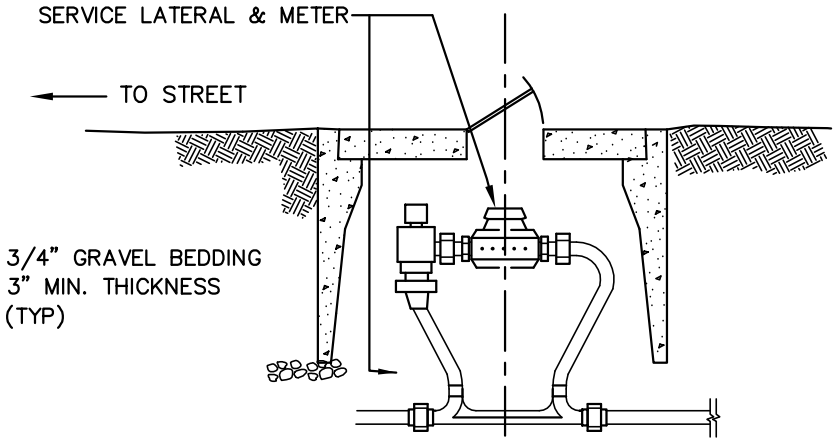

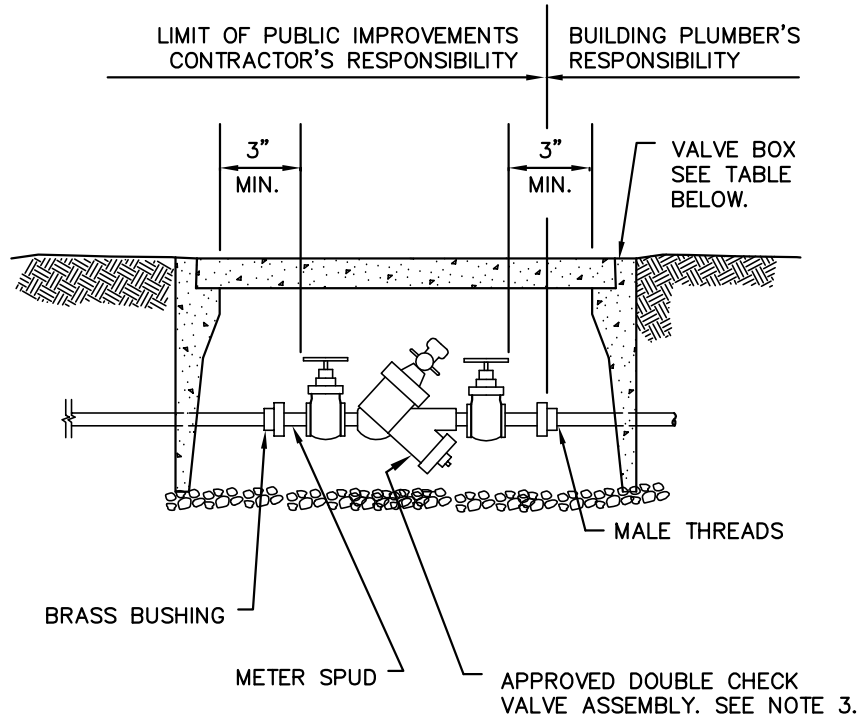

NOTES:

1. DOUBLE CHECK VALVE ASSEMBLIES ARE USED FOR DOMESTIC SERVICE TO PARCELS WITH AN EXISTING WELL SYSTEM.
2. VAULTS SHOWN ARE SIZED FOR WATTS MODEL ASSEMBLIES. OTHER APPROVED DOUBLE CHECK VALVE ASSEMBLIES MAY VARY IN SIZE AND REQUIRE LARGER VAULTS.
3. APPROVED DOUBLE CHECK VALVES SHALL BE AS LISTED BY THE UNIVERSITY OF SOUTHERN CALIFORNIA STUDY, LATEST REVISION.
4. ALL DOUBLE–CHECK VALVE ASSEMBLIES SHALL BE PROVIDED WITH A MINIMUM OF FOUR (4) TEST COCKS.
5. SEE STD. DWG. WA 13 FOR TYPICAL INSTALLATION OF REDUCED PRESSURE TYPE BACKFLOW PREVENTION DEVICE (TO BE USED FOR ALL COMMERCIAL, PROFESSIONAL, INDUSTRIAL, MORTUARY, OR OR ANY USE WHERE TOXIC OR HAZARDOUS MATERIALS MAY BE INVOLVED OR AS DETERMINED BY THE GENERAL MANAGER).
6. PIPING FROM METER TO DOUBLE CHECK VALVE ASSEMBLY & THE DOUBLE CHECK VALVE ASSEMBLY SHALL BE THE SAME SIZES AS THE METER UNLESS OTHERWISE APPROVED BY THE TOWN.

DOUBLE CHECK VALVE SIZE	APPROVED VAULTS (OR EQUAL)
3/4", 1"	CHRISTY B16
1–1/2", 2"	CHRISTY B30

3/4" – 2" DOUBLE CHECK VALVE TYPE BACKFLOW PREVENTER

TOWN OF YOUNTVILLE

3/4" – 2" DOUBLE CHECK VALVE TYPE BACKFLOW PREVENTER

SCALE: NONE | DRAWN: LMM | CHK: PHK | RVSD: 2011

STD. NO. WA 12

DATE: 1996

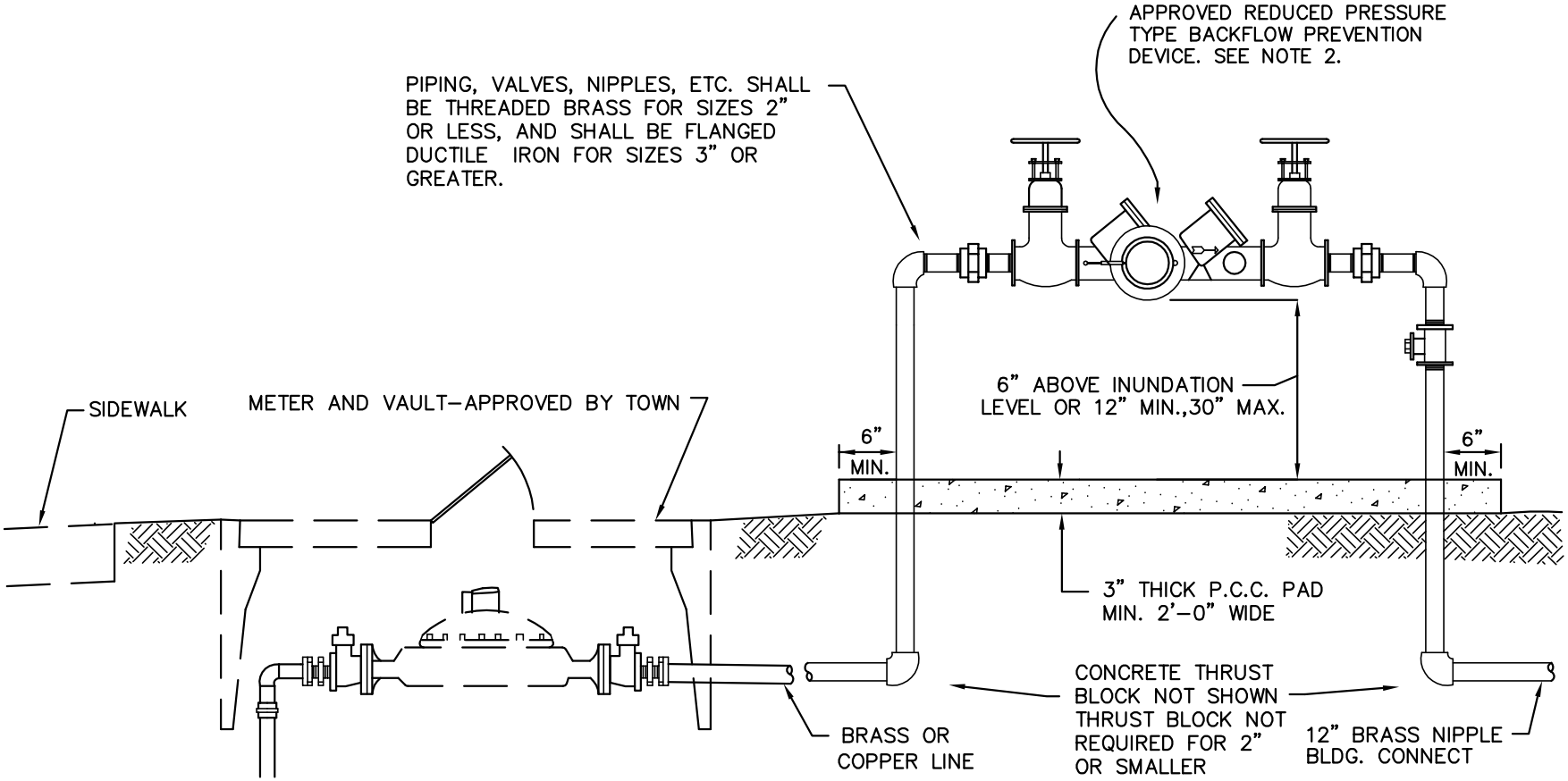

NOTES:

1. REDUCED – PRESSURE TYPE BACKFLOW PREVENTION DEVICES SHALL BE REQUIRED FOR ANY USE WHERE TOXIC MATERIALS ARE USED OR WHERE POSITIVE PROTECTION FOR THE PUBLIC WATER SUPPLY IS REQUIRED. TYPICAL APPLICATIONS INCLUDE; IRRIGATION SERVICES, COMMERCIAL SERVICES, INDUSTRIAL SERVICES, HOSPITALS, LABORATORIES, MORTUARIES, OR AS DETERMINED BY THE TOWN. (TITLE 17 CALIF. ADMINISTRATION CODE)
2. APPROVED REDUCED PRESSURE TYPE BACKFLOW PREVENTION DEVICES SHALL BE AS LISTED BY THE UNIVERSITY OF SOUTHERN CALIFORNIA STUDY, LATEST REVISION.
3. BACKFLOW PREVENTION DEVICES SHALL BE INSTALLED ADJACENT TO AND ON THE PROPERTY SIDE OF SIDEWALK WHERE APPLICABLE. THE ASSEMBLY SHALL BE INSTALLED AS CLOSE TO THE WATER METER LOCATION AS PRACTICAL.
4. DEVICE TO BE SAME SIZE OR LARGER THAN SERVICE METER.
5. LANDSCAPING OR OTHER SCREENING AROUND THE BACKFLOW DEVICE SHALL BE AS SHOWN ON APPROVED PLANS.

TOWN OF YOUNTVILLE

REDUCED–PRESSURE BACKFLOW PREVENTER

STD. NO. WA 13

SCALE: NONE | DRAWN: LMM | CHK: PHK | RVSD: 2011 | DATE: 1996

U.S.C. APPROVED DOUBLE DETECTOR CHECK VALVE ASSEMBLY – W/ O.S. & Y. GATE VALVE CHAINED IN OPEN POSITION. BYPASS PIPING TO INCLUDE DOUBLE CHECK VALVE AND PROVISIONS FOR METER TO BE SET BY TOWN (BADGER RECORDALL MODEL 25 BRONZE).

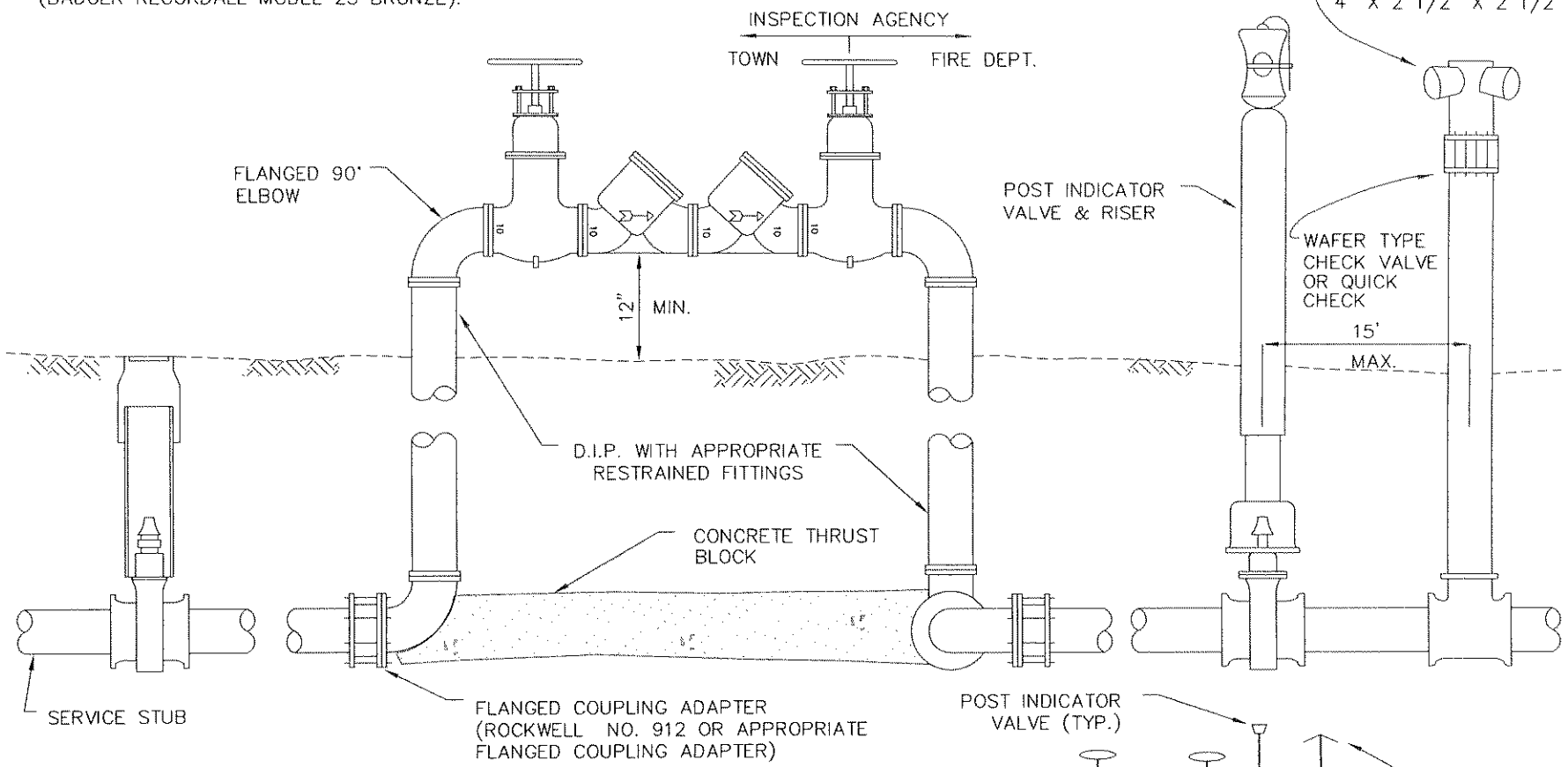

NOTES:

1. INSTALL FIRE HYDRANT WITHIN 50 FEET OF SIAMESE PUMPER CONNECTION, AS SHOWN ON APPROVED PLANS.
2. LOCATION TO BE APPROVED BY THE TOWN AND FIRE DEPARTMENT.
3. ALL ABOVE GROUND VALVES AND POST INDICATOR VALVES SHALL BE EQUIPPED WITH TAMPER SWITCH DEVICES AS APPROVED BY THE FIRE DEPT.
4. COMPLETE INSTALLATION SHALL BE PLUMB AND LEVEL.

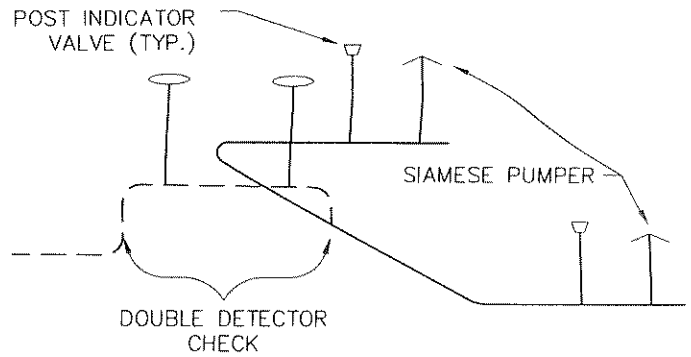

ISOMETRIC OF PIPING FOR DUAL SERVICE

TOWN OF YOUNTVILLE

DOUBLE DETECTOR CHECK VALVE

SCALE: NONE | DRAWN: CLG | CHK: PHK | RVSD:

STD. NO. WA 14

DATE: 2009

TOWN OF YOUNTVILLE

TEMPORARY BLOW - OFF WITH HARNESS

SCALE: NONE | DRAWN: LMM | CHK: PHK | RVSD:

DATE: 1996

STD. NO. WA 15

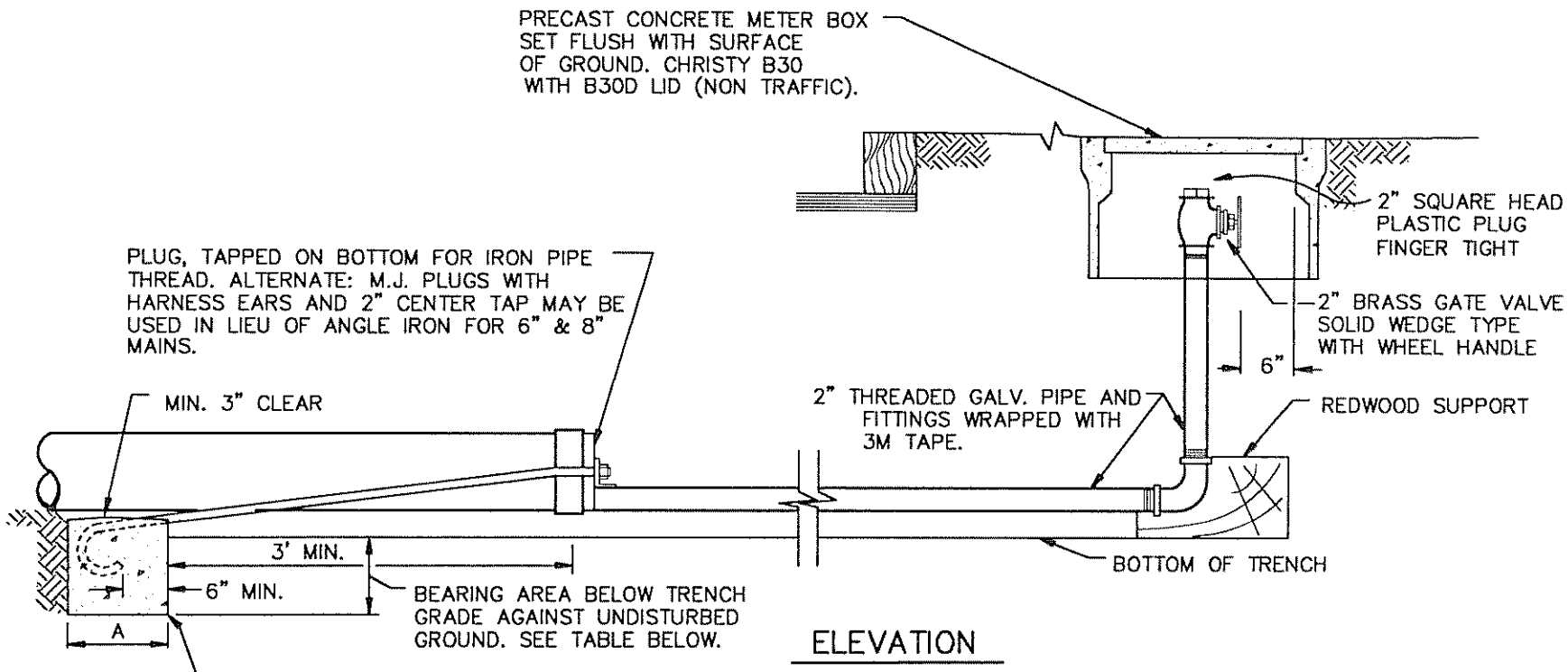

ELEVATION

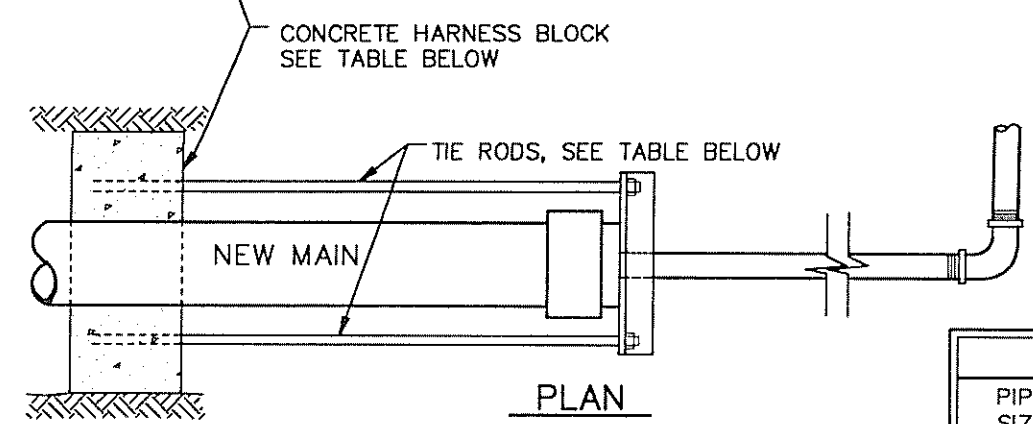

PLAN

CONCRETE SHALL EXTEND AT LEAST TO THE UNDISTURBED EARTH AT BOTH SIDES OF THE TRENCH.

NOTES:

1. BLOW-OFF SHALL NOT BE INSTALLED WITHIN THE TRAVELED WAY. IF THE MAIN ENDS WITHIN STREET AREA, BLOW-OFF TO BE EXTENDED TO AN AREA OUTSIDE OF THE TRAVELED WAY. LID TO BE HIGHWAY GRADE WITH LOCKDOWN CAPABILITY.
2. ALL EXPOSED THREADS SHALL BE PAINTED WITH BITUMASTIC PAINT OR APPROVED SUBSTITUTE AFTER NUTS ARE TIGHTENED.

MINIMUM DIMENSIONS

PIPE SIZE	TIE RODS	ANGLE IRON	BEARING AREA	A	SIZE B.O.
6"	5/8"	3"X3"X1/4"	4 SQ. FT.	2'	2"
8"	3/4"	3 1/2"X3"X1/4"	7 " "	3'	2"
12"	1 1/8"	4"X3"X1/2"	16 " "	3'	2"
OVER 12"	BY THE DESIGN ENGINEER				

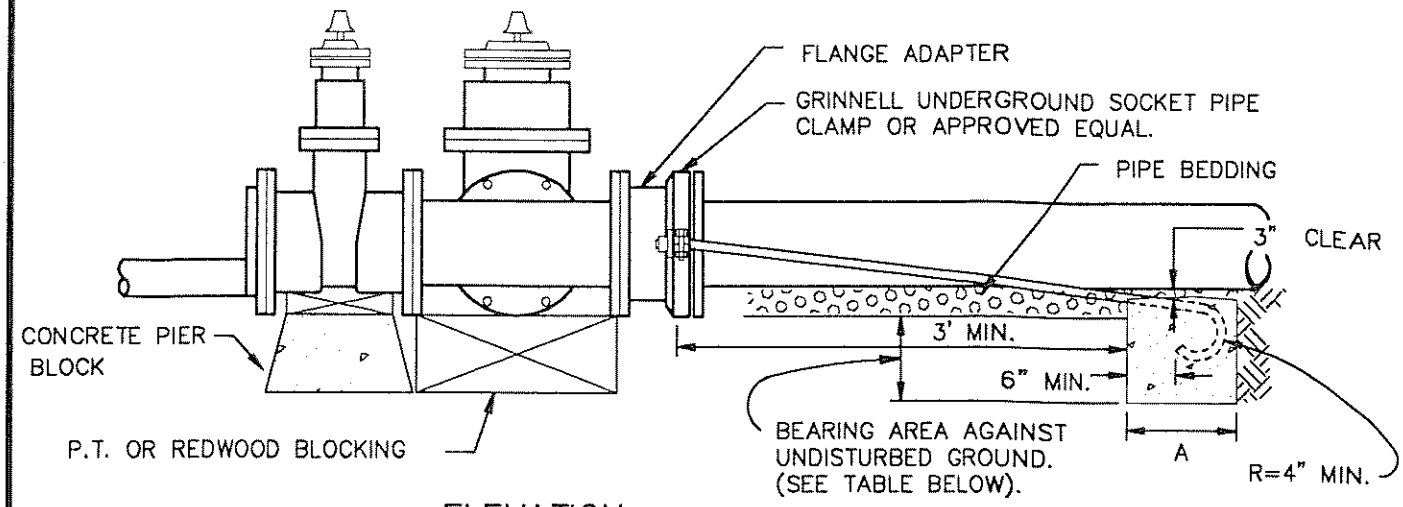

ELEVATION

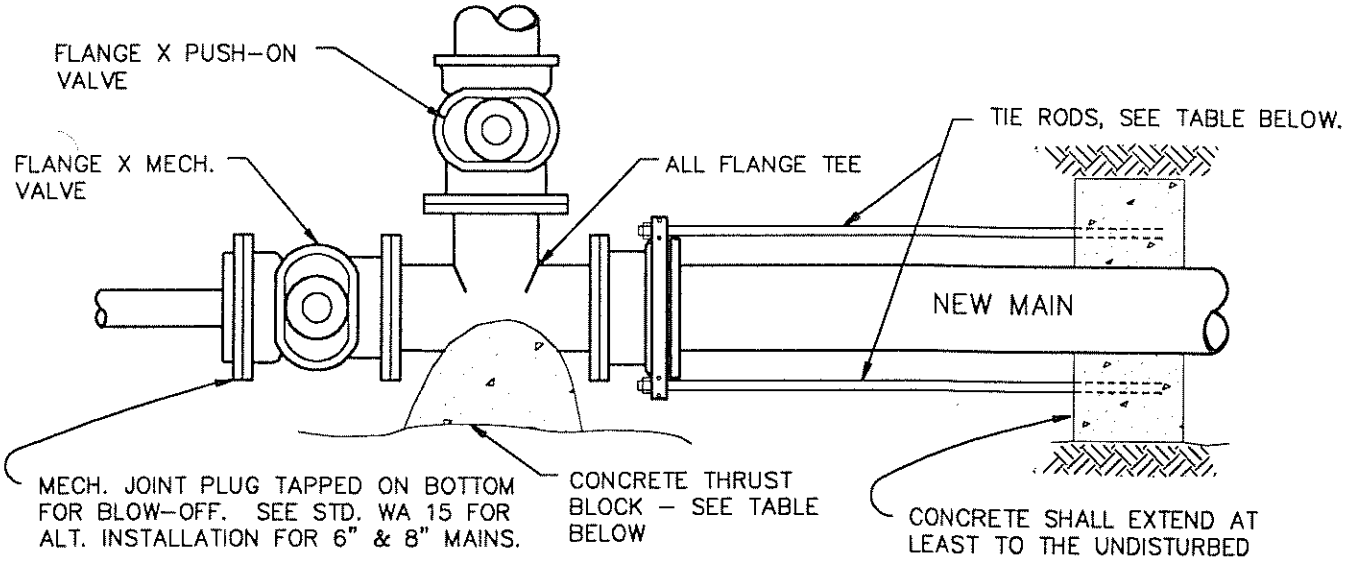

PLAN

MINIMUM DIMENSIONS				
PIPE SIZE	TIE RODS	HARNESS BLOCK *	A	THRUST BLOCK **
6"	5/8"	4 SQ. FT.	2'	4 SQ. FT.
8"	3/4"	7 " "	3'	7 " "
12"	1 1/8"	15 " "	3'	16 " "
OVER 12" BY THE DESIGN ENGINEER				

NOTE:

ALL EXPOSED THREADS SHALL BE PAINTED WITH BITUMASTIC PAINT OR APPROVED SUBSTITUTE, AFTER NUTS ARE TIGHTENED.

* BEARING AREA BELOW GRADE OF PIPE AGAINST UNDISTURBED GROUND.
** BEARING AREA AGAINST UNDISTURBED GROUND.

TOWN OF YOUNTVILLE	HARNESS INSTALLATION FOR FLANGE FITTINGS				STD. NO. WA 16
	SCALE: NONE	DRAWN: LMM	CHK: PHK	RVSD:	DATE: 1996

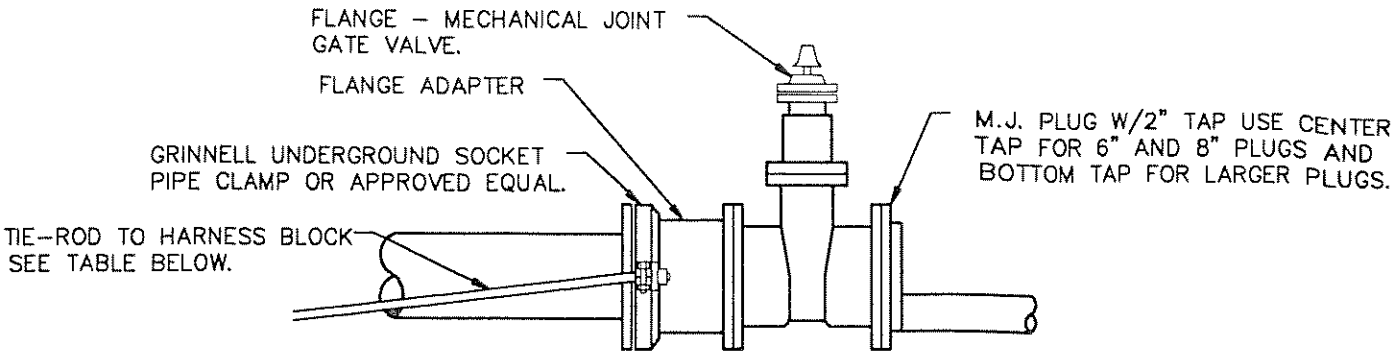

HARNESS FOR VALVE WITH PLUG

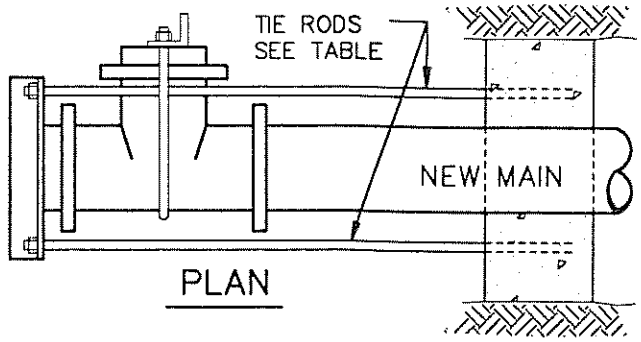

PLAN

CONCRETE SHALL EXTEND AT LEAST TO THE UNDISTURBED EARTH AT BOTH SIDES OF THE TRENCH.

PLUGS FOR MAINS 12" AND LARGER SHALL BE TAPPED OFF CENTER AND HELD WITH ANGLE IRON, AS SHOWN. PLUGS WITH EARS AND CENTER TAP MAY BE USED FOR 6" & 8" MAINS.

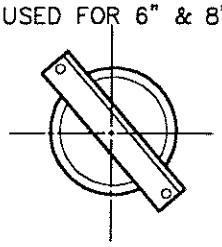

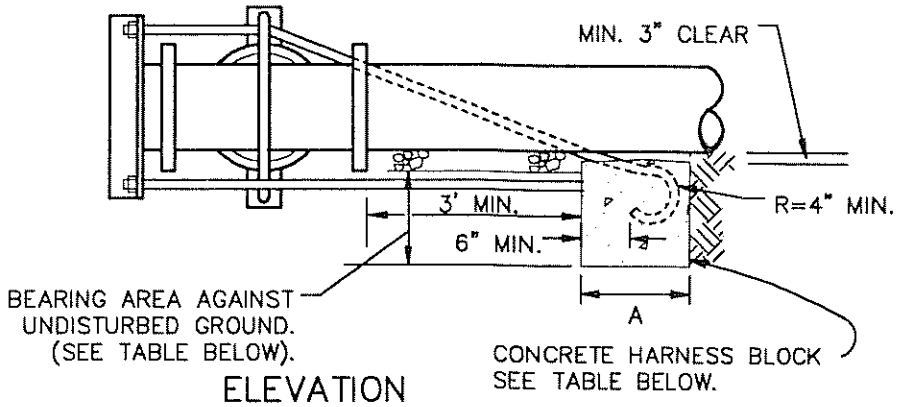

ELEVATION

MINIMUM DIMENSIONS				
PIPE SIZE	TIE RODS	ANGLE IRON	* HARNESS BLOCK	A
6"	5/8"	3"X3"X1/4"	4 SQ. FT.	2'
8"	3/4"	3-1/2"X3"X1/4"	7 " "	3'
12"	1-1/8"	4"X3"X1/2"	16 " "	3'
OVER 12"	BY THE DESIGN ENGINEER			

* BEARING AREA BELOW GRADE OF PIPE AGAINST UNDISTURBED GROUND.

TYPICAL FITTING HARNESS

NOTE:

ALL EXPOSED THREADS SHALL BE PAINTED WITH BITUMASTIC PAINT OR OR APPROVED SUBSTITUTE, AFTER NUTS ARE TIGHTENED.

TOWN OF YOUNTVILLE	HARNESS INSTALLATION				STD. NO. WA 17
	SCALE: NONE	DRAWN: LMM	CHK: PHK	RVSD:	DATE: 1996

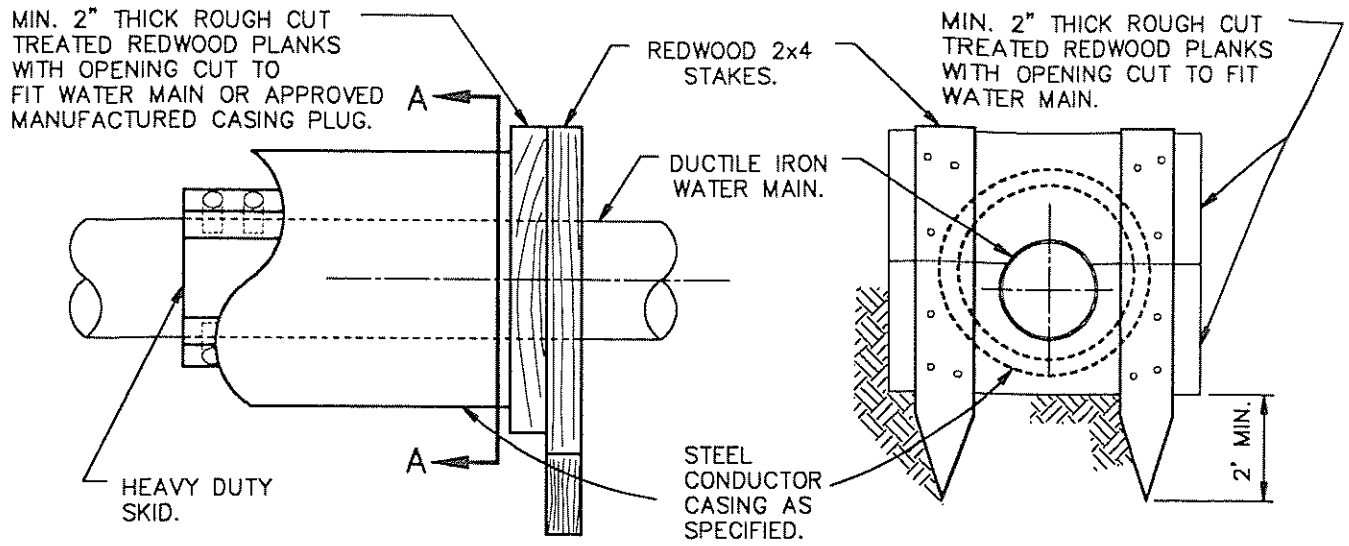

DIRT STOP DETAIL

NO SCALE

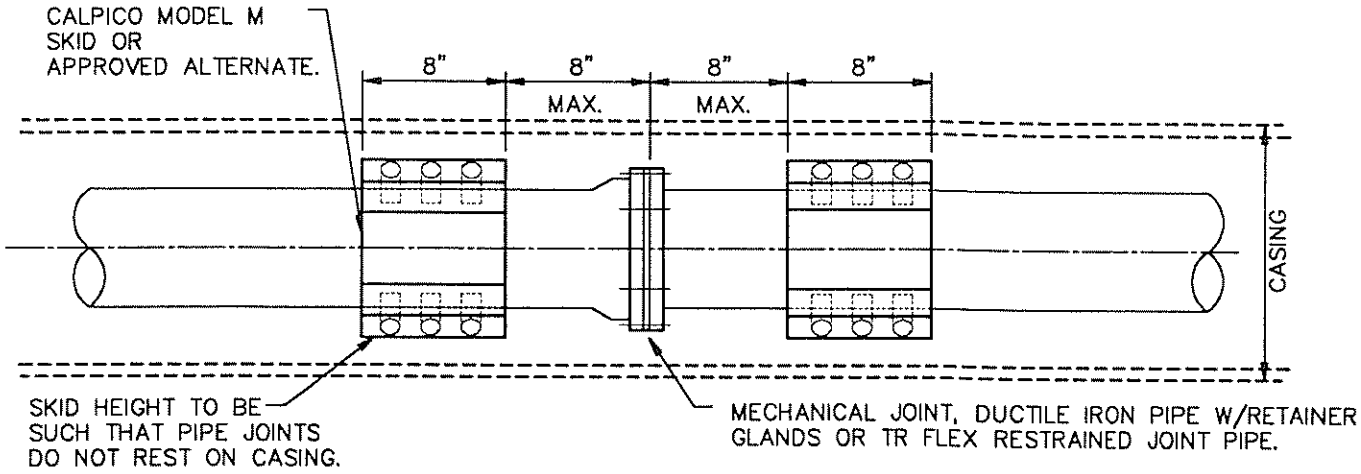

PIPE JOINT AND INSULATOR

NO SCALE

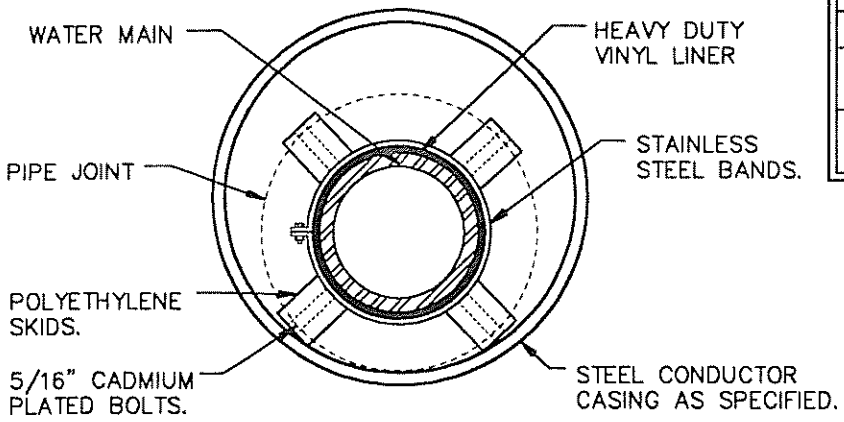

SECTION "A–A"

NO SCALE

MINIMUM SIZE CASING REQUIRED					
PIPE SIZE	6"	8"	12"	14"	16"
CASING SIZE (INSIDE DIA.)	16"	16"	20"	24"	30"
CASING WALL THICKNESS	.250	.250	.250	.250	.375

NOTES:

1. INSTALL PER MANUFACTURERS SPECIFICATIONS.
2. SEE GENERAL CONST. NOTES.
3. WHERE CONDUCTOR CASING IS EXISTING R.C.P., REDWOOD SKIDS MAY BE INSTALLED IN LIEU OF POLYETHYLENE SKIDS WITH TOWN APPROVAL.

TOWN OF YOUNTVILLE	DIRT STOP AND WATER MAIN ENCASEMENT				STD. NO. WA 18
	SCALE: NONE	DRAWN: LMM	CHK: PHK	RVSD:	DATE: 1996

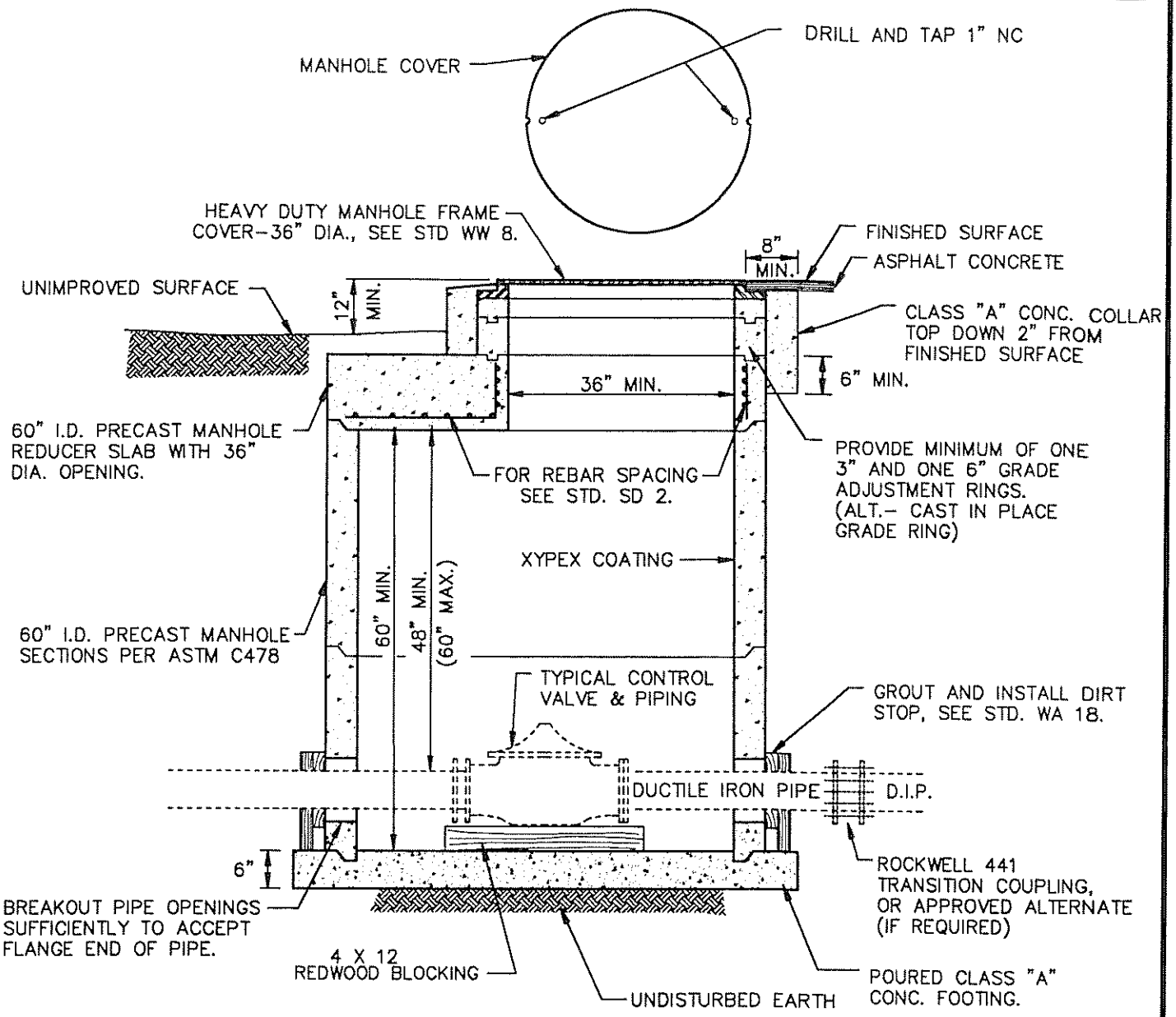

NOTES:

1. PRIOR APPROVAL OF THE USE OF THE MANHOLE-STYLE VAULT MUST BE OBTAINED FROM THE TOWN FOR THE SPECIFIC SIZE AND MODEL VALVE OR APPURTENANCE TO BE INSTALLED.
2. THE MINIMUM MANHOLE I.D. SHALL BE 60".
3. ALL REDUCERS SHALL BE SLAB-STYLE. CONE-TYPE REDUCERS ARE NOT ACCEPTABLE.
4. ALL GATE VALVES SHALL BE INSTALLED ON EXTERIOR OF THE MANHOLE PER STD. WA 4.
5. SET ALL MANHOLE SECTIONS AND GRADE RINGS IN PLASTIC GASKET, RAM-NEK OR APPROVED ALTERNATES.
6. WHERE POSSIBLE, INSTALL P.V.C. DRAIN PIPE FROM BASE OF MANHOLE TO DAYLIGHT OR TO STORM DRAIN.
7. SEE GENERAL CONSTRUCTION NOTES.
8. IN DESIGNATED FLOOD PLAIN AREAS, A WATERTIGHT MANHOLE SHALL BE INSTALLED WITH CONC. BASE.

TOWN OF YOUNTVILLE	TRAFFIC - TYPE PRECAST WATER UTILITY MANHOLE				STD. NO. WA 19
	SCALE: NONE	DRAWN: LMM	CHK: PHK	RVSD:	DATE: 1996

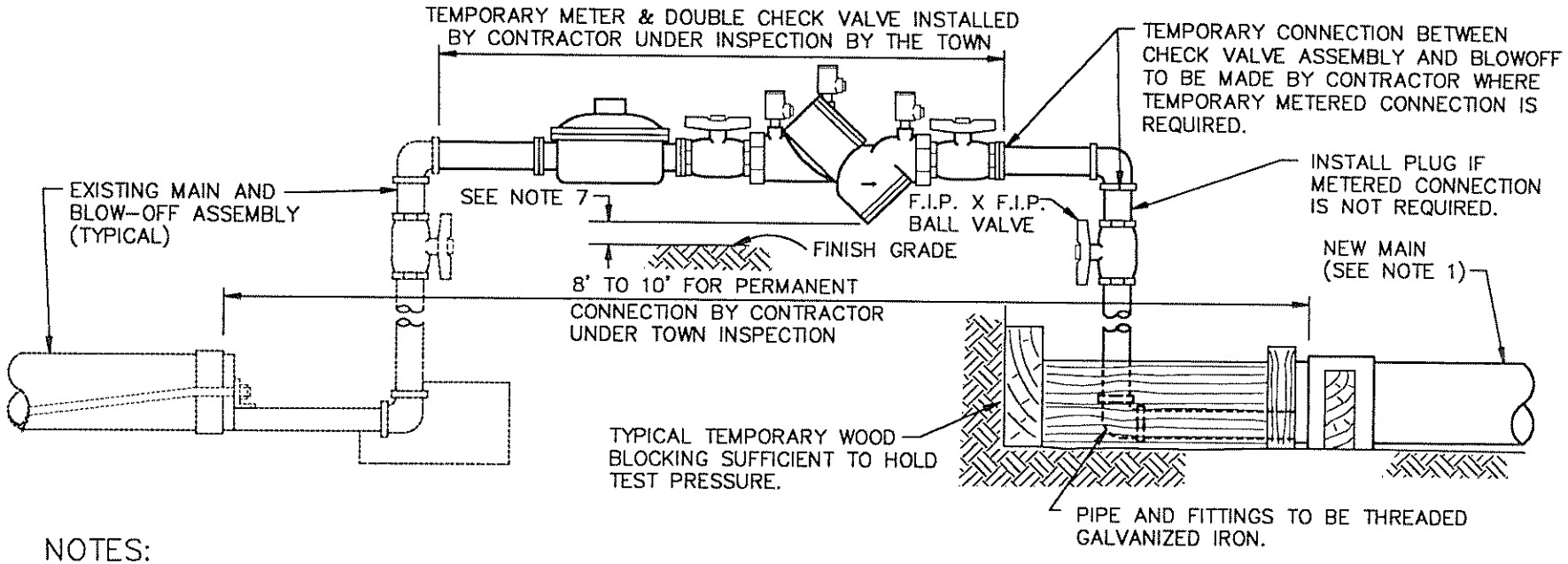

ELEVATION

NOTES:

1. END OF NEW MAIN TO BE ON SAME LINE AND GRADE AS EXISTING WHERE FEASIBLE.
2. WOOD BLOCKING TO BE FOR THRUST PRODUCED BY TEST PRESSURE PLUS 50 P.S.I.
3. SAFE BEARING LOAD OF SOIL FOR HORIZONTAL THRUST SHALL NOT BE EXCEEDED.
4. SEE STD. WA 15 FOR BLOWOFF SIZE CHART. ("BLOWOFF" IS PIPE AND FITTINGS, UP TO AND INCLUDING VALVE.)
5. THE CONTRACTOR SHALL MAKE FINAL TIE-INS AT THE DEVELOPERS EXPENSE UNDER THE INSPECTION OF A TOWN REPRESENTATIVE.
6. SHOULD THE BLOWOFF ON THE EXISTING MAIN BE LOCATED OUT OF THE TRAVELED WAY AS INDICATED ON STD. WA 15, THE TEMPORARY BLOWOFF PIPING SHALL BE EXTENDED OUT OF THE TRAVELED WAY AND THE RISERS, METER, AND CHECK VALVE WILL BE INSTALLED OUT OF TRAVELED WAY.
7. CLEARANCE TO BE 6" ABOVE INUNDATION LEVEL OR 12" MIN. ABOVE FIN. GRADE.
8. TWO INCH TEMPORARY CONSTRUCTION METER ACCEPTABLE UNTIL COMBUSTIBLE MATERIALS STORED ON SITE OR CONSTRUCTION ABOVE GRADE BEGINS

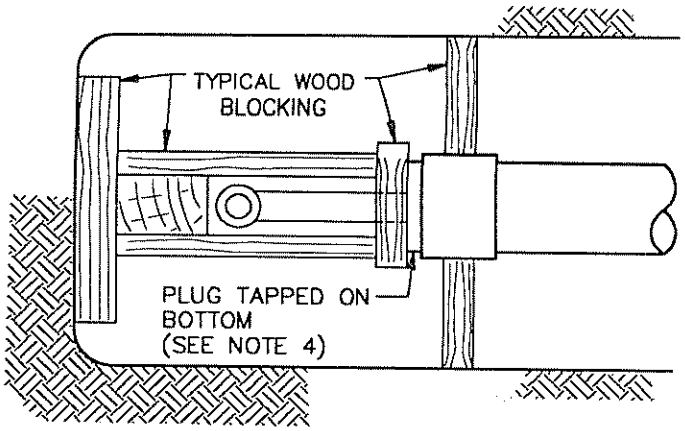

PLAN

TOWN OF YOUNTVILLE

TYPICAL TEMPORARY BLOWOFF AND/OR METERED CONNECTION - MAINS UNDER CONSTRUCTION

STD. NO. WA 20

SCALE: NONE	DRAWN: LMM	CHK: PHK	RVSD:	DATE: 1996

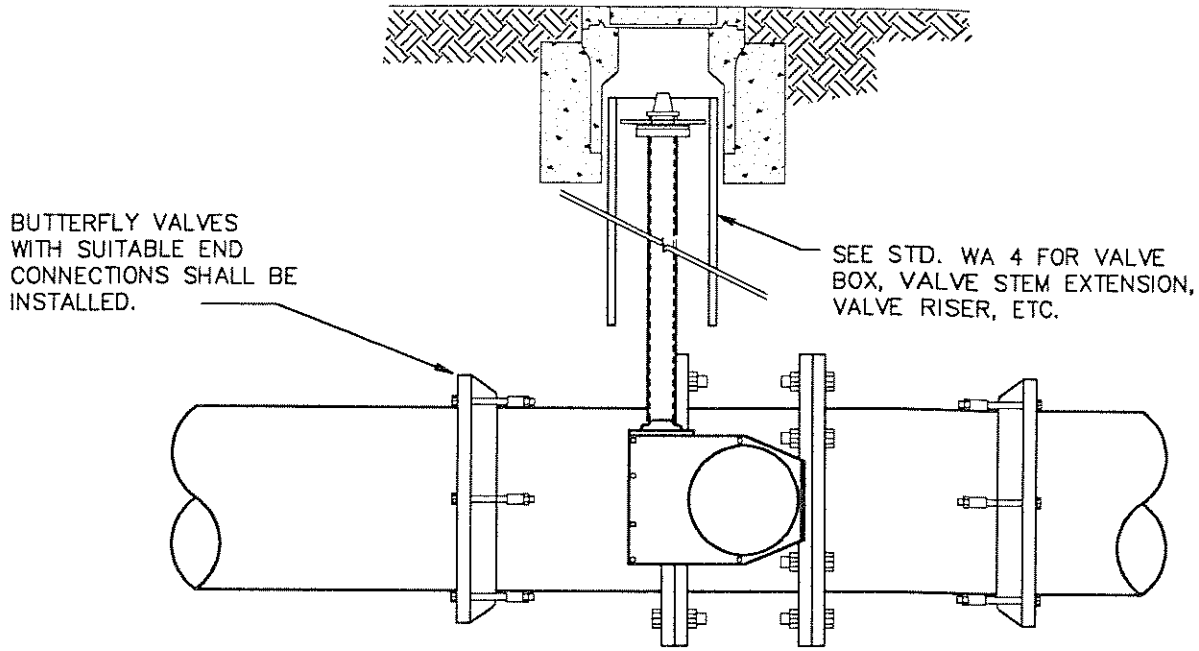

BUTTERFLY VALVE INSTALLATION

TO BE USED ON PIPE 18" AND LARGER

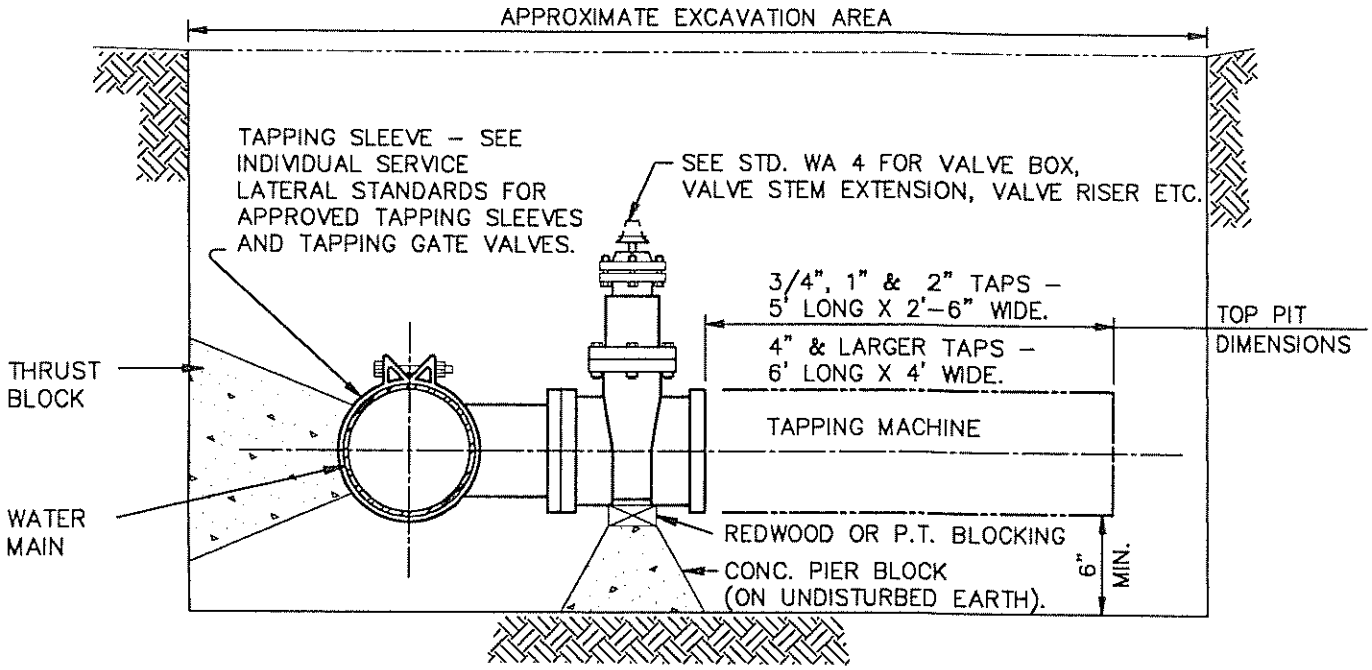

TAPPING SLEEVE & VALVE INSTALLATION

NOTES:

1. ALL EXTERNAL BOLTS AND NUTS ON VALVES SHALL BE 304 STAINLESS STEEL OR VALVE ASSEMBLY SHALL BE POLY–WRAPPED.
2. TAPS SHALL BE MADE BY CONTRACTOR UNDER TOWN INSPECTION.
3. ALL BUTTERFLY VALVES SHALL CONFORM TO TOWN SPECIFICATIONS.

TOWN OF YOUNTVILLE	INSTALLATION OF BUTTERFLY VALVE AND TAPPING VALVE				STD. NO. WA 21
	SCALE: NONE	DRAWN: LMM	CHK: PHK	RVSD:	DATE: 1996

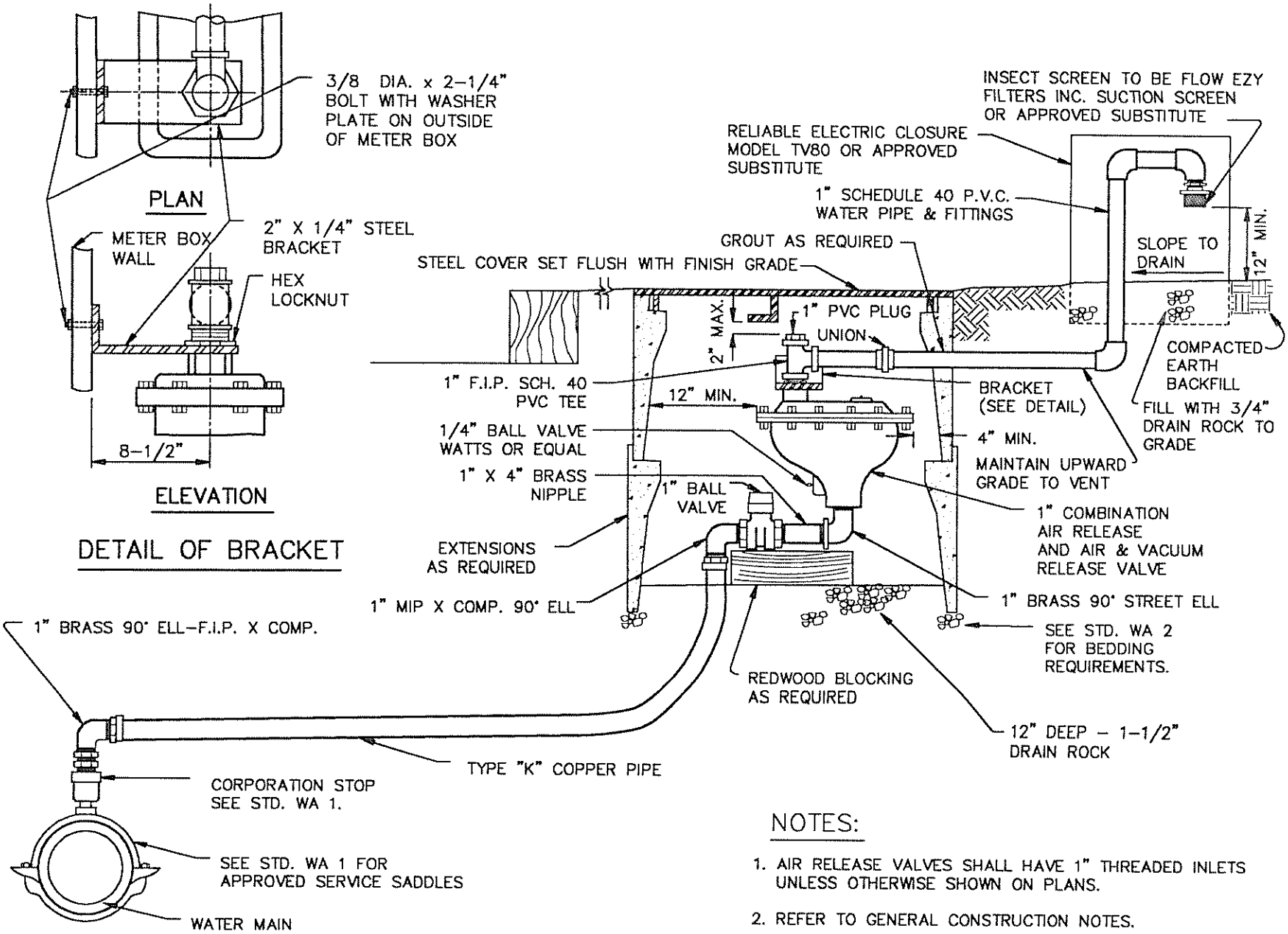

NOTES:

1. AIR RELEASE VALVES SHALL HAVE 1" THREADED INLETS UNLESS OTHERWISE SHOWN ON PLANS.
2. REFER TO GENERAL CONSTRUCTION NOTES.
3. SEE TOWN'S APPROVED LIST FOR COMBINATION AIR VALVE, BALL VALVES, FITTINGS, VAULTS AND LIDS.

TOWN OF YOUNTVILLE

TYPICAL INSTALLATIONS OF AIR AND VACUUM & AIR RELEASE VALVE

SCALE: NONE	DRAWN: LMM	CHK: PHK	RVSD:

STD. NO. WA 22

DATE: 1996

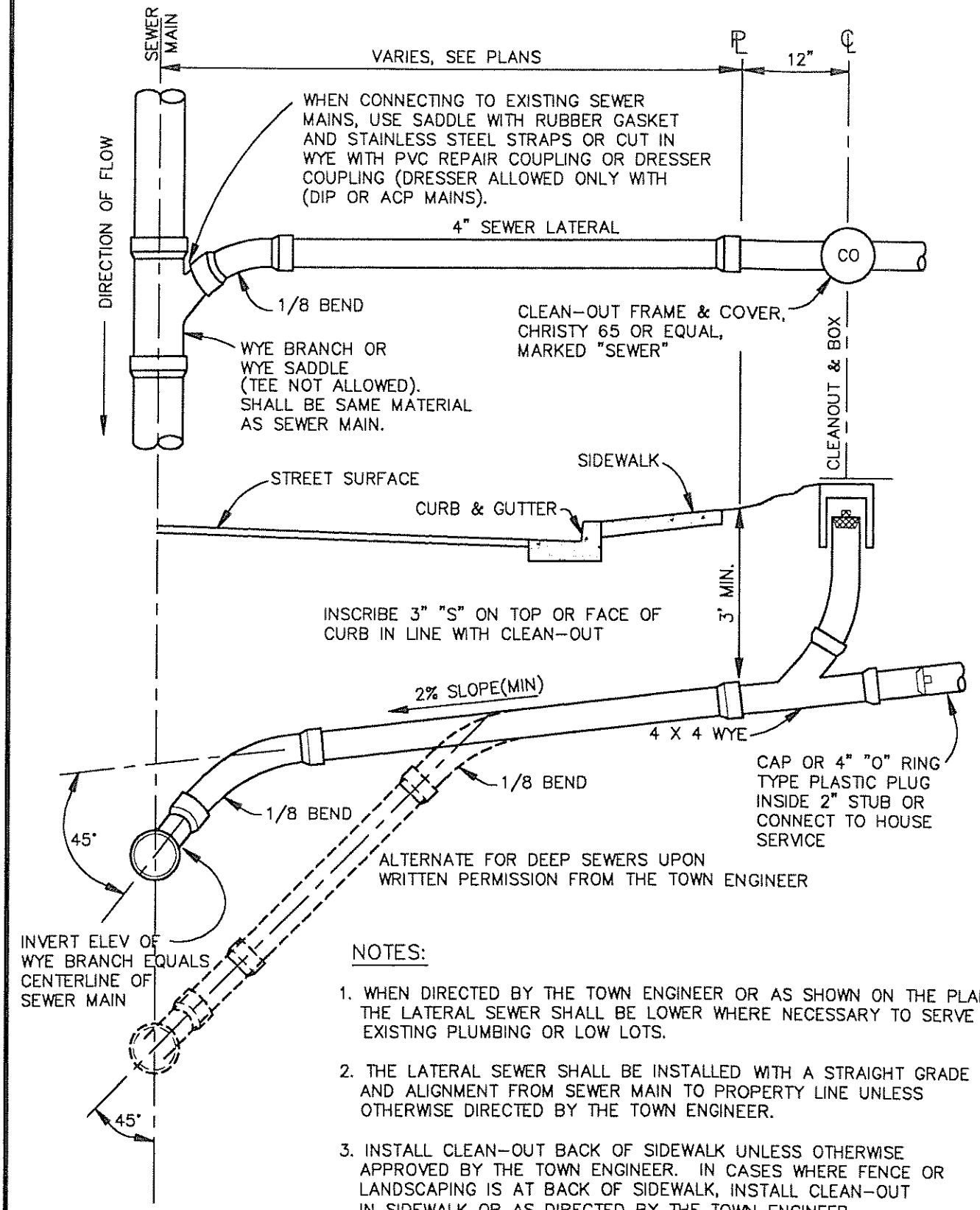

NOTES:

1. WHEN DIRECTED BY THE TOWN ENGINEER OR AS SHOWN ON THE PLANS, THE LATERAL SEWER SHALL BE LOWER WHERE NECESSARY TO SERVE EXISTING PLUMBING OR LOW LOTS.
2. THE LATERAL SEWER SHALL BE INSTALLED WITH A STRAIGHT GRADE AND ALIGNMENT FROM SEWER MAIN TO PROPERTY LINE UNLESS OTHERWISE DIRECTED BY THE TOWN ENGINEER.
3. INSTALL CLEAN-OUT BACK OF SIDEWALK UNLESS OTHERWISE APPROVED BY THE TOWN ENGINEER. IN CASES WHERE FENCE OR LANDSCAPING IS AT BACK OF SIDEWALK, INSTALL CLEAN-OUT IN SIDEWALK OR AS DIRECTED BY THE TOWN ENGINEER.

TOWN OF YOUNTVILLE	SEWER SERVICE LATERAL				STD. NO. WW 1
	SCALE: NONE	DRAWN: LMM	CHK: PHK	RVSD:	DATE: 1996

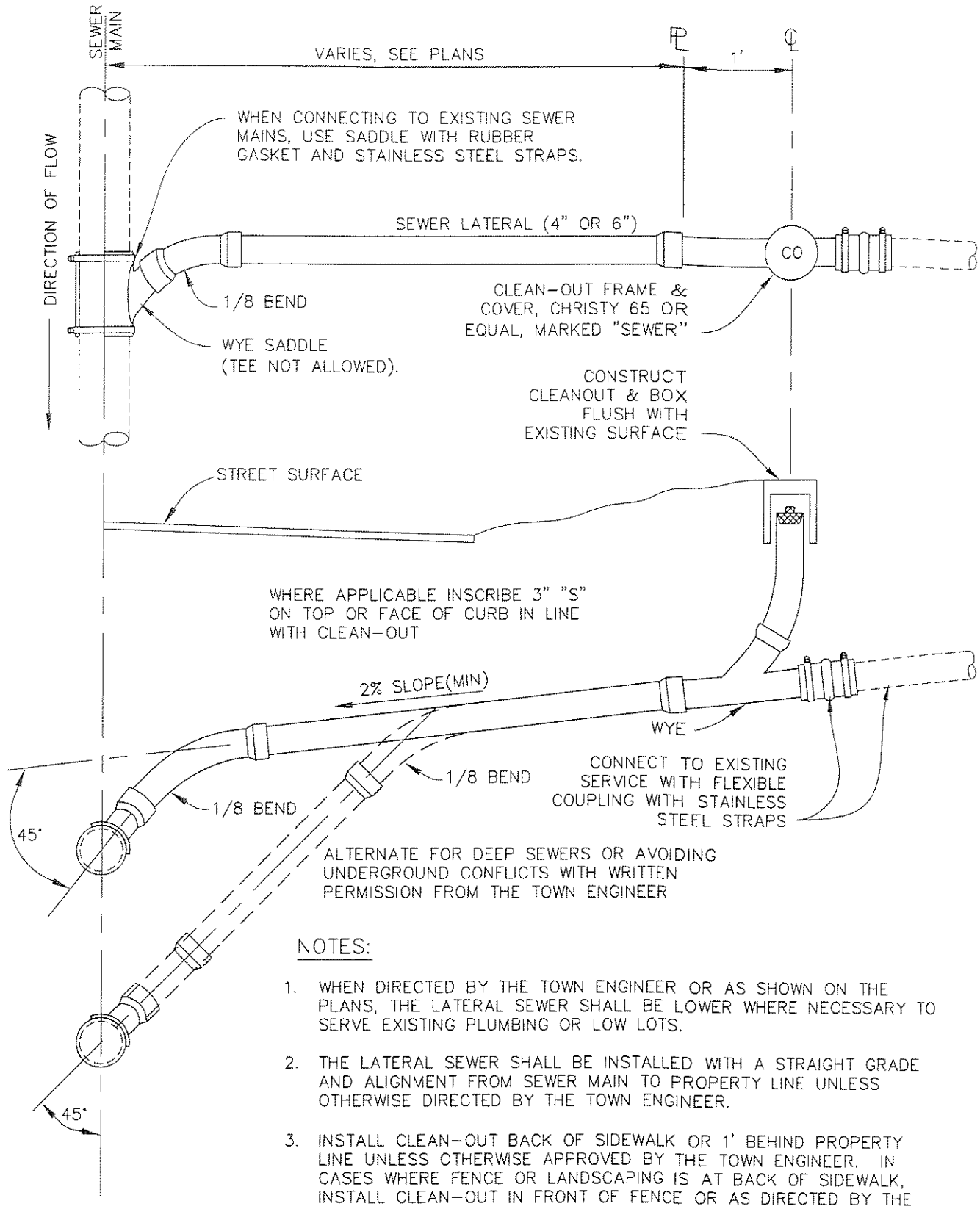

NOTES:

1. WHEN DIRECTED BY THE TOWN ENGINEER OR AS SHOWN ON THE PLANS, THE LATERAL SEWER SHALL BE LOWER WHERE NECESSARY TO SERVE EXISTING PLUMBING OR LOW LOTS.
2. THE LATERAL SEWER SHALL BE INSTALLED WITH A STRAIGHT GRADE AND ALIGNMENT FROM SEWER MAIN TO PROPERTY LINE UNLESS OTHERWISE DIRECTED BY THE TOWN ENGINEER.
3. INSTALL CLEAN-OUT BACK OF SIDEWALK OR 1' BEHIND PROPERTY LINE UNLESS OTHERWISE APPROVED BY THE TOWN ENGINEER. IN CASES WHERE FENCE OR LANDSCAPING IS AT BACK OF SIDEWALK, INSTALL CLEAN-OUT IN FRONT OF FENCE OR AS DIRECTED BY THE TOWN ENGINEER.

TOWN OF YOUNTVILLE	SEWER SERVICE LATERAL RETROFIT/RELOCATION				STD. NO. WW 1R
	SCALE: NONE	DRAWN: WJK	CHK: PHK	RVSD:	DATE: 2009

Images:
Xrefs:
Path: F:\BMAP-STD\Yountvil\STDS\YNTWWIR.DWG Layout Name: Model Plot Date: Jul 01, 2009 at 10:15 am

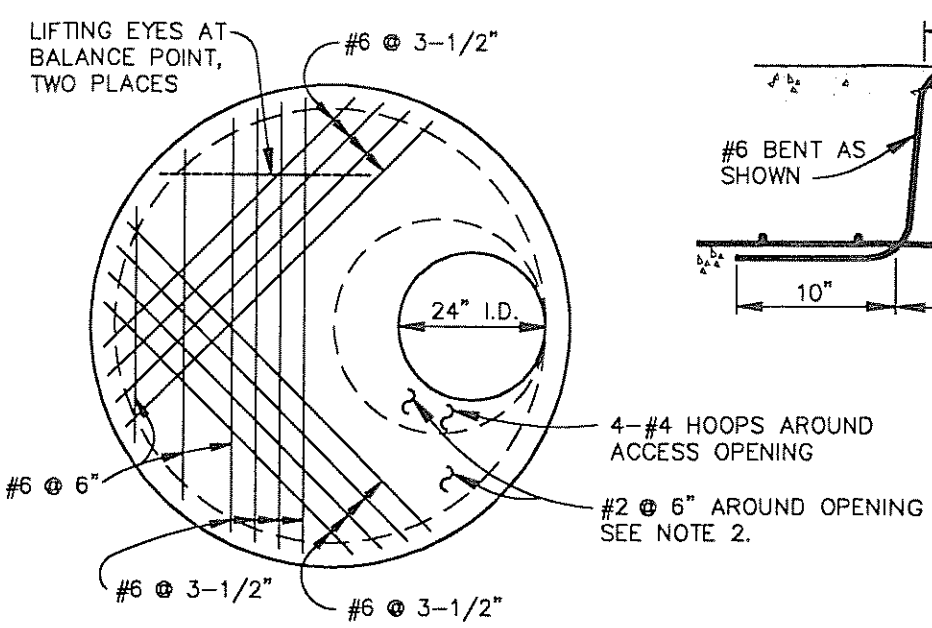

SLAB PLAN

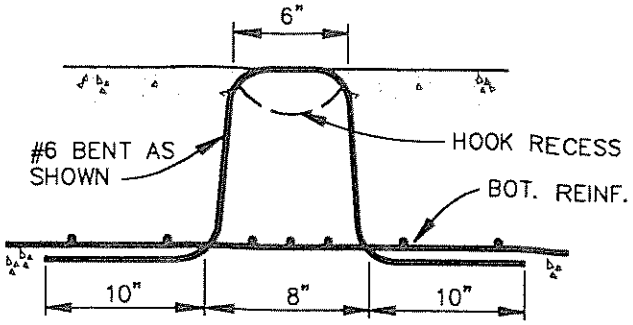

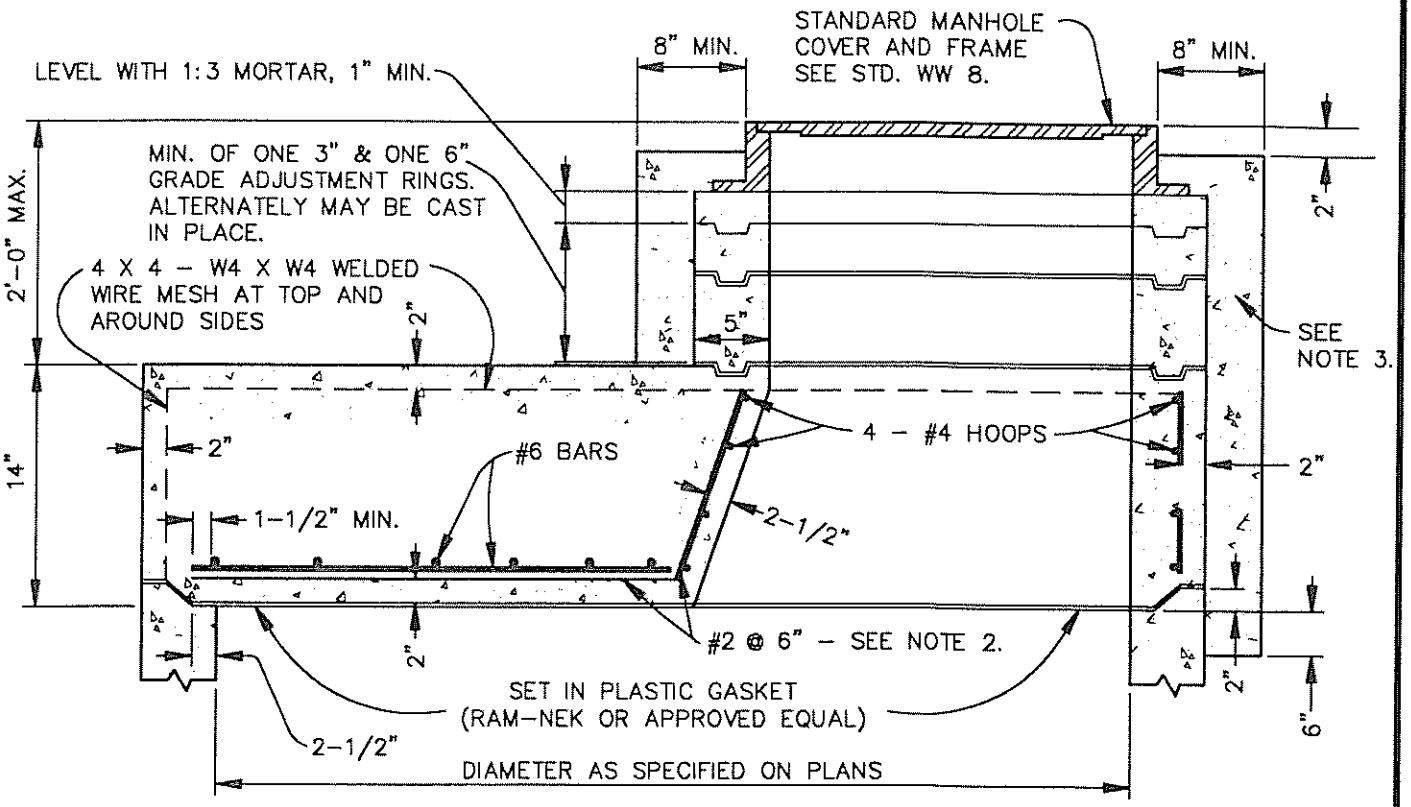

NOTES:

1. FOR DETAILS AND SPECIFICATIONS OF BASE AND BARREL SECTIONS, SEE TOWN STDS. WW 6 & WW 7.
2. #2 BARS BENTS UP AND SPACED 6" O.C. AROUND 24" OPENING. HORIZONTAL LEGS TO FAN OUT EQUALLY SPACED, TO 2-1/2" CLEAR AT EDGE OF SLAB.
3. CLASS "A" CONCRETE COLLAR.

TOWN OF YOUNTVILLE	STANDARD PRECAST CONCRETE MANHOLE REDUCER SLAB				STD. NO. WW 2
	SCALE: NONE	DRAWN: LMM	CHK: PHK	RVSD:	DATE: 1996

NOTE:

WHERE BUILDING SEWERS ARE LOCATED UNDER DRIVEWAYS, CAST IRON OR DUCTILE IRON SEWER PIPE SHALL BE USED.

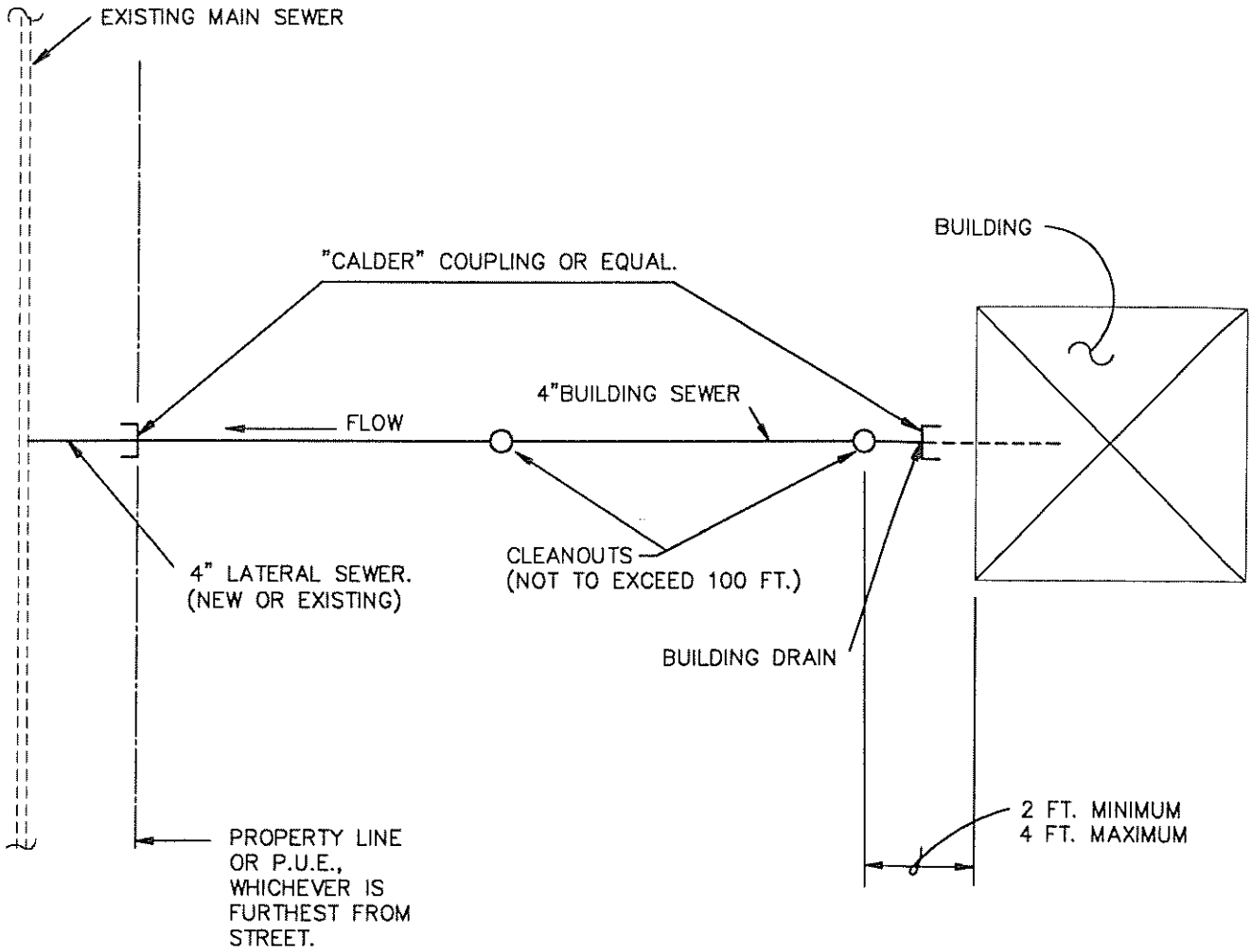

PLAN

TOWN OF YOUNTVILLE	TYPICAL SERVICE SEWER CONNECTION DETAILS				STD. NO. WW 3
	SCALE: NONE	DRAWN: LMM	CHK: PHK	RVSD:	DATE: 1996

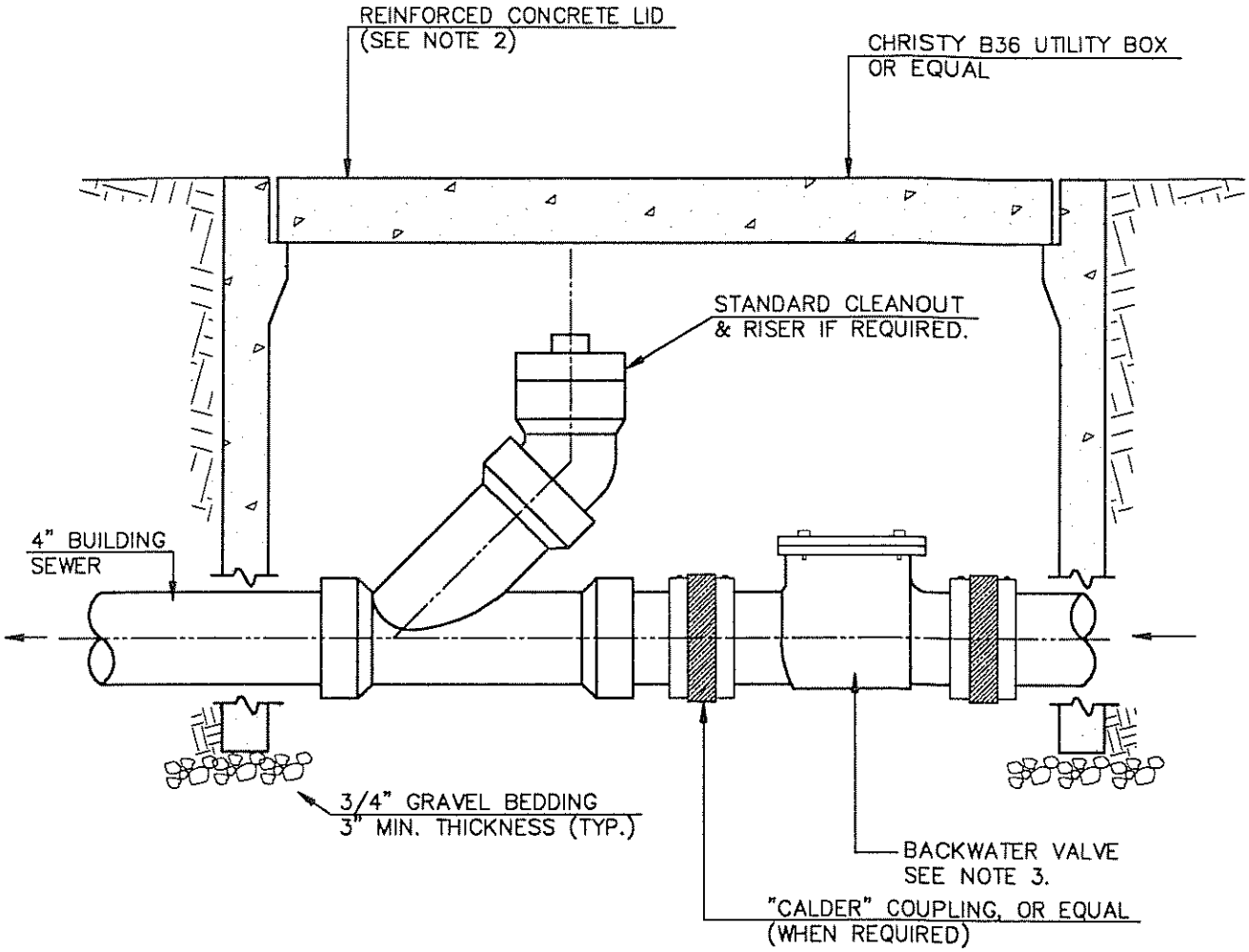

NOTES:

1. THIS INSTALLATION IS REQUIRED WHEREVER THE LOWEST FINISHED FLOOR ELEVATION IS TWELVE (12") INCHES, OR LESS ABOVE THE TOP ELEVATION OF THE NEAREST UPSTREAM MANHOLE OR CLEANOUT.

2. IF THE LID IS SUBJECT TO VEHICULAR TRAFFIC, USE LID DESIGNED FOR H-20 TRAFFIC LOADINGS.

3. BACKWATER VALVE SHALL BE CAST IRON OR CAST BRONZE. VALVE SHALL BE APPROVED BY THE TOWN ENGINEER.

TOWN OF YOUNTVILLE	BACKWATER CHECK VALVE INSTALLATION				STD. NO. WW 4
	SCALE: NONE	DRAWN: LMM	CHK: PHK	RVSD:	DATE: 1996

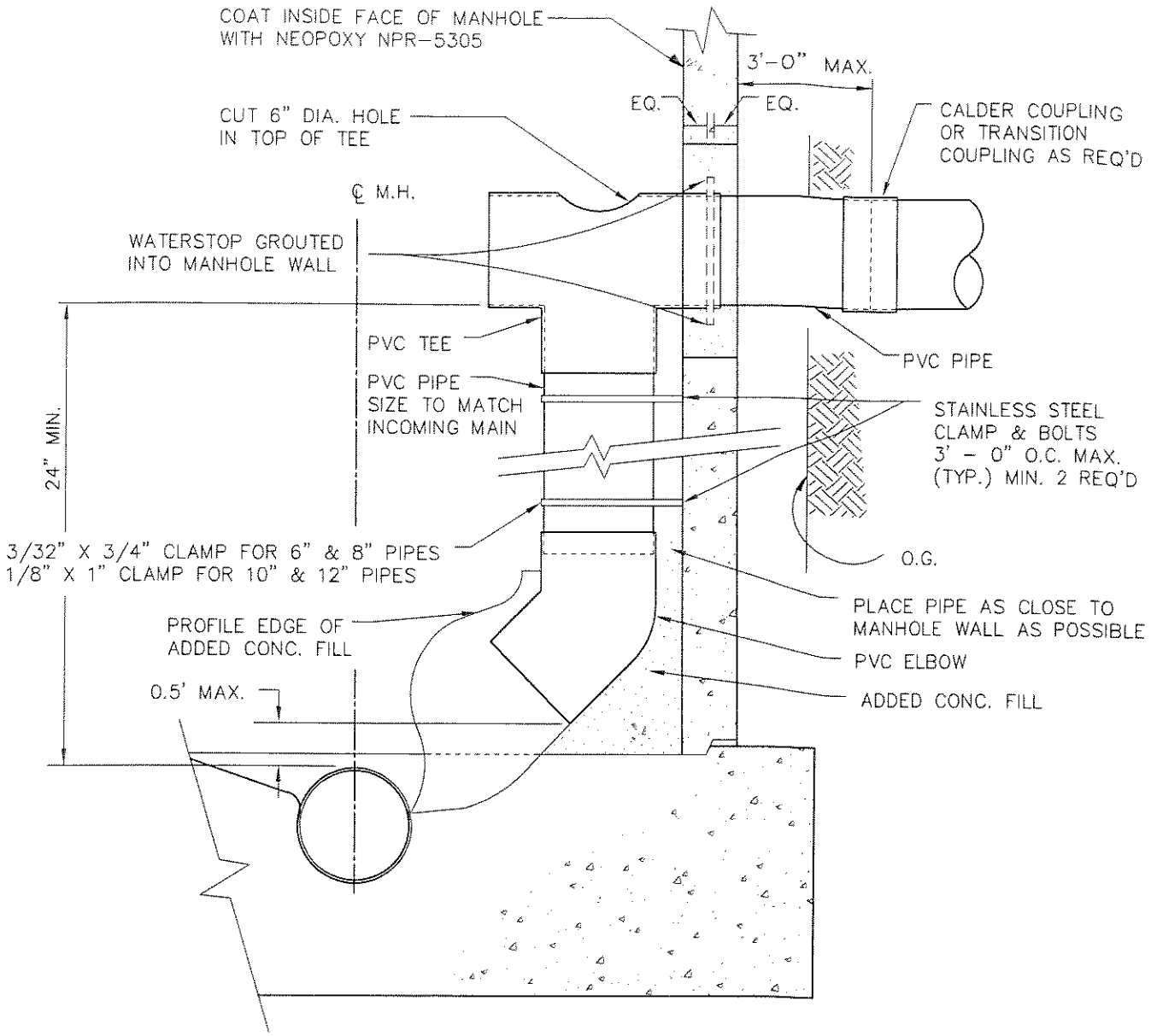

NOTES:

1. PVC PIPE AND FITTINGS TO BE SDR 26 OR SCH 40.
2. ENCLOSE ELBOW IN CONCRETE. FORM SMOOTH CHANNEL TO MANHOLE FLOWLINE.
3. DROP MANHOLE TO BE USED ONLY WITH APPROVAL OF TOWN ENGINEER.
4. INSTALL WATERSTOP IN ACCORDANCE WITH MANUFACTURER'S INSTRUCTIONS AS SHOWN.
5. NEW MANHOLES CONSTRUCTED USING THIS STANDARD SHALL BE 60 INCHES IN DIAMETER, & INSTALLED IN CONFORMANCE WITH STD. WW7.

TOWN OF YOUNTVILLE	DROP MANHOLE				STD. NO. WW 5
	SCALE: NONE	DRAWN: LMM	CHK: PHK	RVSD: JWM	DATE: 2009

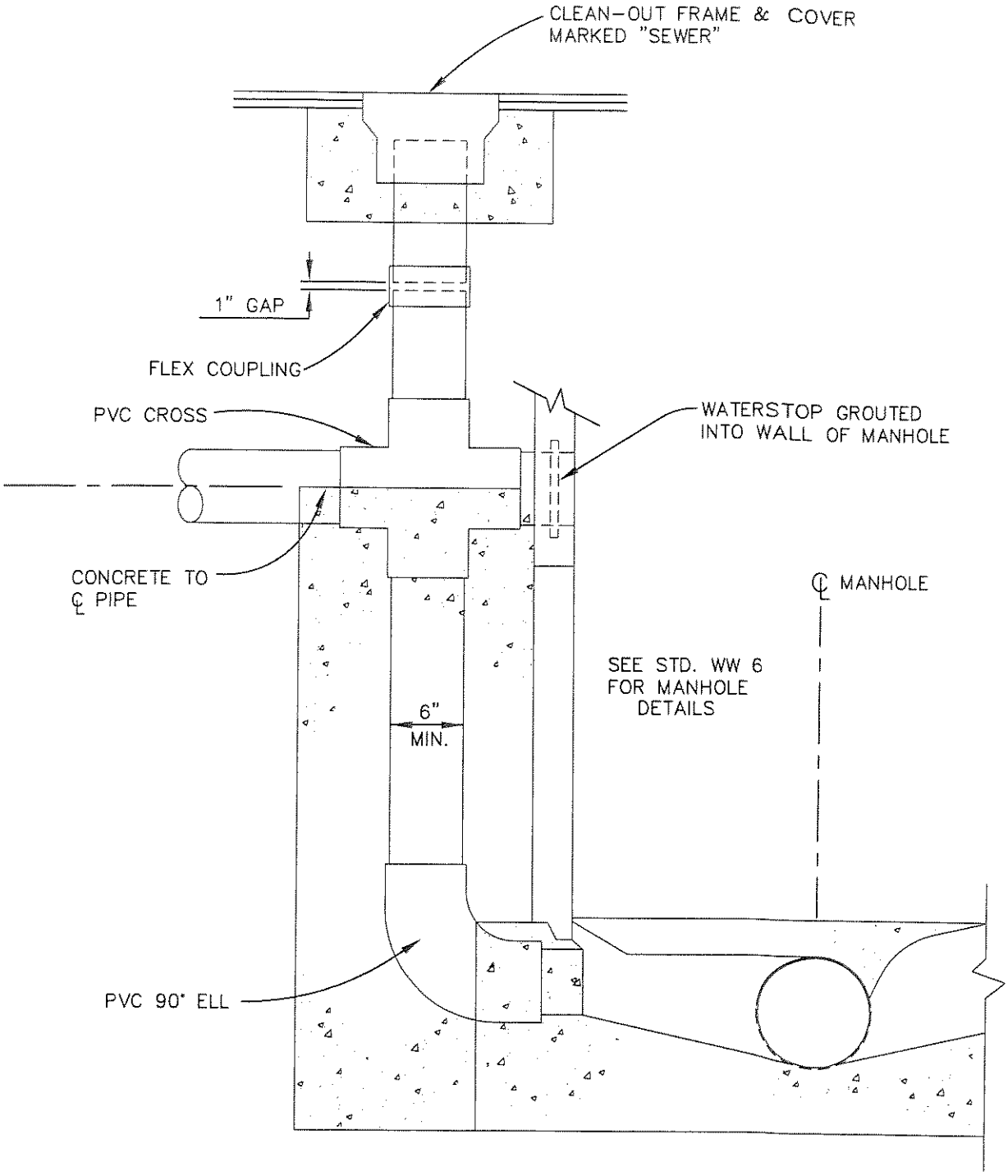

NOTES:

1. PVC PIPE AND FITTINGS TO BE SDR 26 OR SCH 40.
2. FORM SMOOTH CHANNEL TO FLOWLINE.
3. OUTSIDE DROP MANHOLE TO BE USED ONLY WITH APPROVAL OF TOWN ENGINEER.

TOWN OF YOUNTVILLE	OUTSIDE DROP MANHOLE				STD. NO. WW 5A
	SCALE: NONE	DRAWN: LMM	CHK: PHK	RVSD: JWM	DATE: 2009

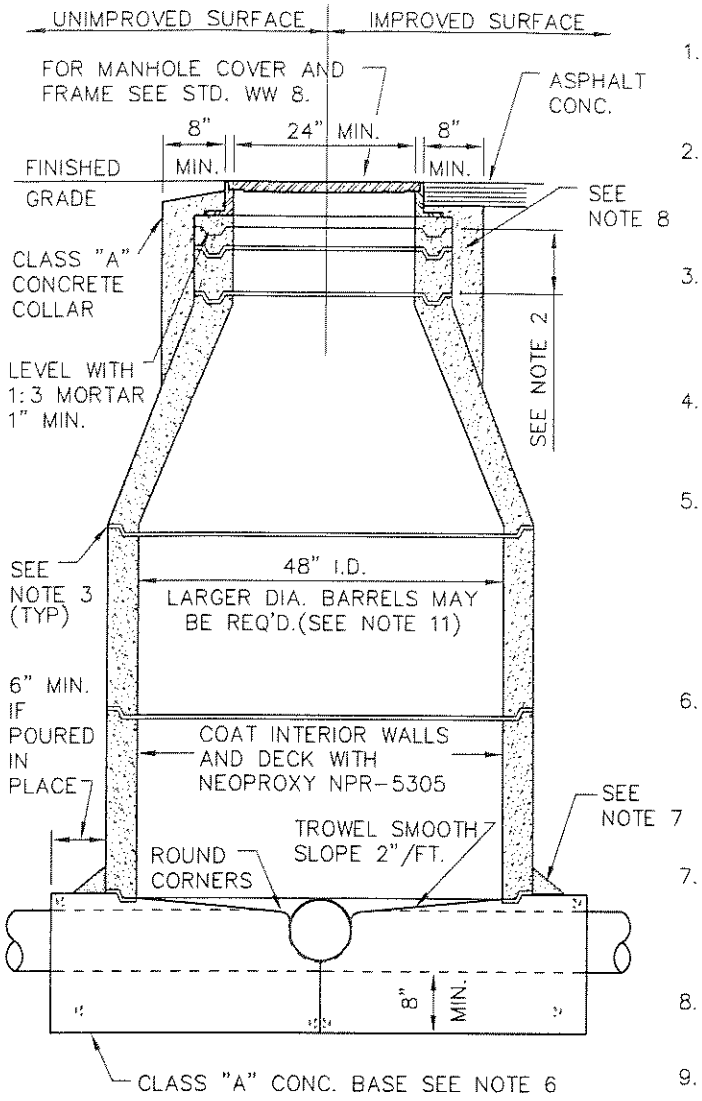

NOTES:

1. WHEN MANHOLES ARE INSTALLED IN UNIMPROVED AREAS, THE TOP OF THE COVER SHALL BE A MIN. OF 1 FOOT ABOVE ADJACENT FINISHED GRADE.
2. MIN. OF ONE 3" AND ONE 6" GRADE ADJUSTMENT RINGS. MAX. HEIGHT OF GRADE ADJUSTMENT RINGS = 20". ALTERNATELY, CONTRACTOR MAY CAST GRADE ADJUSTMENT RINGS IN PLACE.
3. SET ALL BARREL SECTIONS & TAPER SECTIONS IN PLASTIC GASKET, RAM-NEK OR APPROVED ALTERNATE. TYP JOINT 1-1/2" (3/4 X 2-1/2") RAM-NEK SEAL (2 SEALS IN HIGH WATER TABLE AREAS).
4. CONE SECTION (TAPER) MUST BE CONCENTRIC FOR 48" MANHOLE UNLESS OTHERWISE SPECIFIED AND APPROVED BY THE TOWN ENGINEER.
5. CONSTRUCT ALL FLOW CHANNELS OF PIPE WHEREVER POSSIBLE. AFTER LOWER RING SECTION IS SET, BREAK OUT TOP HALF OF PIPE FLUSH WITH INSIDE FACE OF M.H. WALL AND CONSTRUCT SHELF AND U-SHAPED CHANNEL. MAKE ELEVATION CHANGES GRADUALLY AND DIRECTIONAL CHANGES WITH SMOOTH CURVES.
6. POURED-IN-PLACE BASE SHALL BE POURED FULL THICKNESS TO UNDISTURBED SIDES OF EXCAVATION OR SHALL BE FORMED. PRECAST BASE TO BE FROM A TOWN APPROVED LIST AND PLACED ON 12" THICK 3/4" DRAIN ROCK SUBBASE INSTALLED AGAINST UNDISTURBED EARTH.
7. JOINT BETWEEN BASE AND BARREL TO BE SEALED W/1-1/2" (3/4" X 2-1/2") RAM-NEK SEAL (2 SEALS IN HIGH WATER TABLE AREAS), AND PLASTER 6" FILLET, 1:3 MORTAR.
8. CLASS "A" CONC. COLLAR SHALL BE 2" BELOW FINISHED GRADE.
9. STANDARD MANHOLE BARREL SECTION PER ASTM C478.
10. BARREL AND TAPER SECTIONS MAY BE CAST IN PLACE AS APPROVED BY THE TOWN ENGINEER.
11. 48" I.D. MANHOLE TO BE USED ONLY FOR SEWER MAINS LESS THAN 18" DIAMETER AND LESS THAN 8 FT. DEEP FROM FINISHED GRADE. 60" I.D. MANHOLES PER STD. WW 7 FOR ALL OTHER APPLICATIONS.
12. ALL SECTIONS OF MANHOLE MUST BE OF IDENTICAL MAKE AND MANUFACTURER.
13. MANHOLE TO BE DEWATERED AND DRY PRIOR TO INSPECTION.

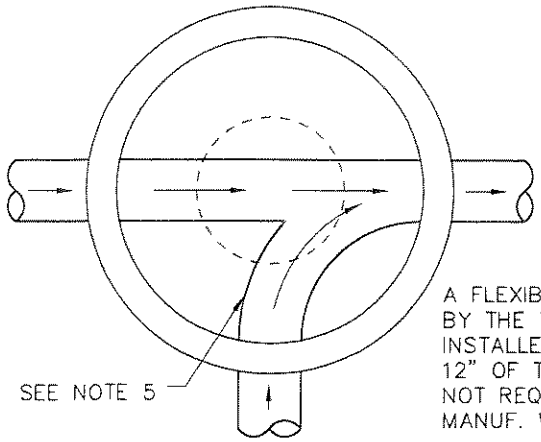

A FLEXIBLE COUPLING, AS APPROVED BY THE TOWN ENGINEER, SHALL BE INSTALLED IN THE SEWER MAIN WITHIN 12" OF THE BASE OF THE MANHOLE (TYP). NOT REQUIRED WHEN PRECAST BASES ARE MANUF. W/FLEX. CPLGS. ALREADY INSTALLED

MANHOLE BASE

CHANNELIZATION PLAN

TOWN OF YOUNTVILLE	STANDARD 48" DIA. PRECAST CONCRETE MANHOLE SANITARY SEWER				STD. NO. WW 6
	SCALE: NONE	DRAWN: LMM	CHK: PHK	RVSD: 2009	DATE: 2008

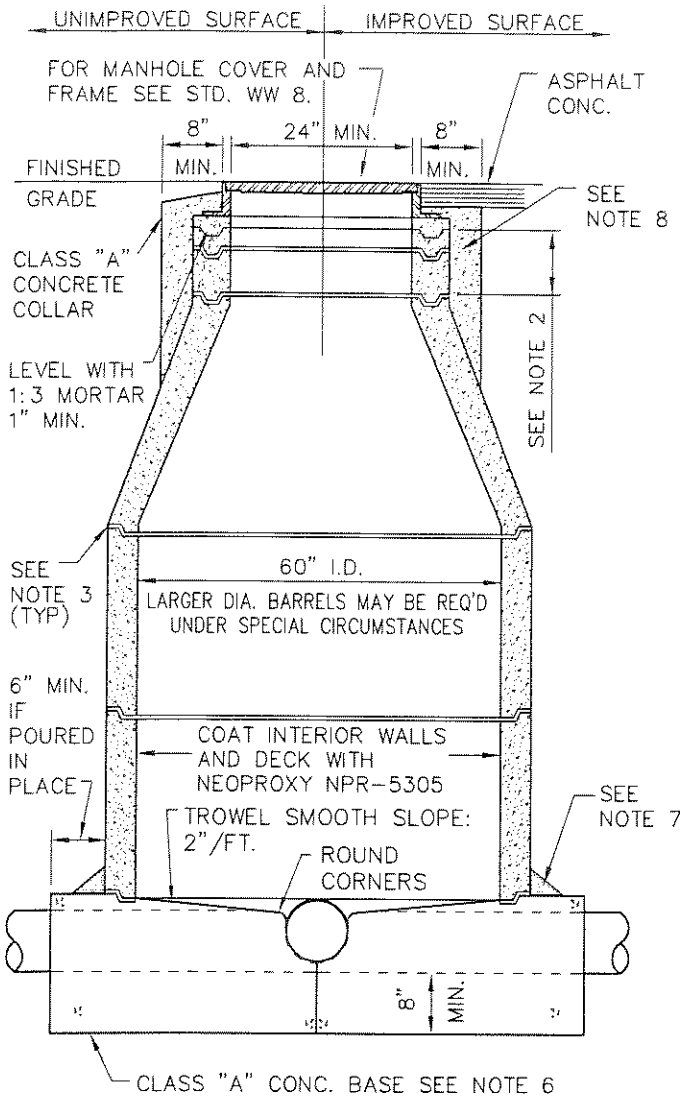

A FLEXIBLE COUPLING, AS APPROVED BY THE TOWN ENGINEER SHALL BE INSTALLED IN THE SEWER MAIN WITHIN 12" OF THE BASE OF THE MANHOLE (TYP). NOT REQUIRED WHEN PRECAST BASES ARE MANUF. W/FLEX. CPLGS. ALREADY INSTALLED.

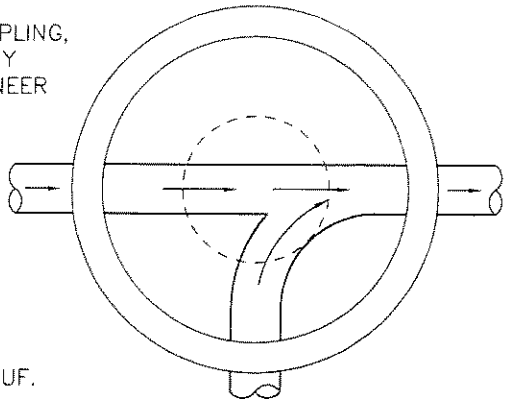

MANHOLE BASE

CHANNELIZATION PLAN AND LOCATION OF ECCENTRIC MANHOLE COVER

NOTES:

1. WHEN MANHOLES ARE INSTALLED IN UNIMPROVED AREAS, THE TOP OF THE COVER SHALL BE A MIN. OF 1 FOOT ABOVE ADJACENT FINISHED GRADE.
2. MIN. OF ONE 3" AND ONE 6" GRADE ADJUSTMENT RINGS. MAX. HEIGHT OF GRADE ADJUSTMENT RINGS = 20". ALTERNATELY, CONTRACTOR MAY CAST GRADE ADJUSTMENT RINGS IN PLACE.
3. SET ALL BARREL SECTIONS & TAPER SECTIONS IN PLASTIC GASKET, RAM-NEK OR APPROVED ALTERNATE. TYP JOINT 1-1/2" (3/4" X 2-1/2") RAM-NEK SEAL (2 SEALS IN HIGH WATER TABLE AREAS).
4. CONE SECTION (TAPER) MUST BE CONCENTRIC FOR 60" MANHOLE UNLESS OTHERWISE SPECIFIED AND APPROVED BY THE TOWN ENGINEER.
5. CONSTRUCT ALL FLOW CHANNELS OF PIPE WHEREVER POSSIBLE. AFTER LOWER RING SECTION IS SET, BREAK OUT TOP HALF OF PIPE FLUSH WITH INSIDE FACE OF M.H. WALL AND CONSTRUCT SHELF AND U-SHAPED CHANNEL. MAKE ELEVATION CHANGES GRADUALLY AND DIRECTIONAL CHANGES WITH SMOOTH CURVES.
6. POURED-IN-PLACE BASE SHALL BE POURED FULL THICKNESS TO UNDISTURBED SIDES OF EXCAVATION OR SHALL BE FORMED. PRECAST BASE TO BE FROM THE TOWN APPROVED LIST AND PLACED ON 12" THICK 3/4" DRAIN SUB-BASE INSTALLED AGAINST UNDISTURBED EARTH.
7. JOINT BETWEEN BASE AND BARREL SHALL BE SEALED W/1-1/2" (3/4" X 2-1/2") RAM-NEK SEAL (2 SEALS IN HIGH WATER TABLE AREAS), AND PLASTER 6" FILLET, 1:3 MORTAR.
8. CLASS "A" CONC. COLLAR SHALL BE 2" BELOW FINISHED GRADE.
9. STANDARD MANHOLE BARREL SECTION PER ASTM C478.
10. BARREL AND TAPER SECTIONS MAY BE CAST IN PLACE AS APPROVED BY THE TOWN ENGINEER.
11. 60" I.D. MANHOLE TO BE USED FOR ALL TRUNK AND COLLECTOR SEWERS 18" TO 30" OR WHERE DIMENSION FROM FINISHED GRADE TO THE SEWER FLOW LINE IS GREATER THAN 8'-0", AS INDICATED ON THE DESIGN PLANS.
12. ALL SECTIONS OF MANHOLE MUST BE OF IDENTICAL MAKE AND MANUFACTURER.
13. MANHOLE SHALL BE DEWATERED AND DRY PRIOR TO INSPECTION.

TOWN OF YOUNTVILLE	STANDARD 60" DIA. PRECAST CONCRETE MANHOLE SANITARY SEWER				STD. NO. WW 7
	SCALE: NONE	DRAWN: CLG	CHK: PHK	RVSD: 2009	DATE: 2009

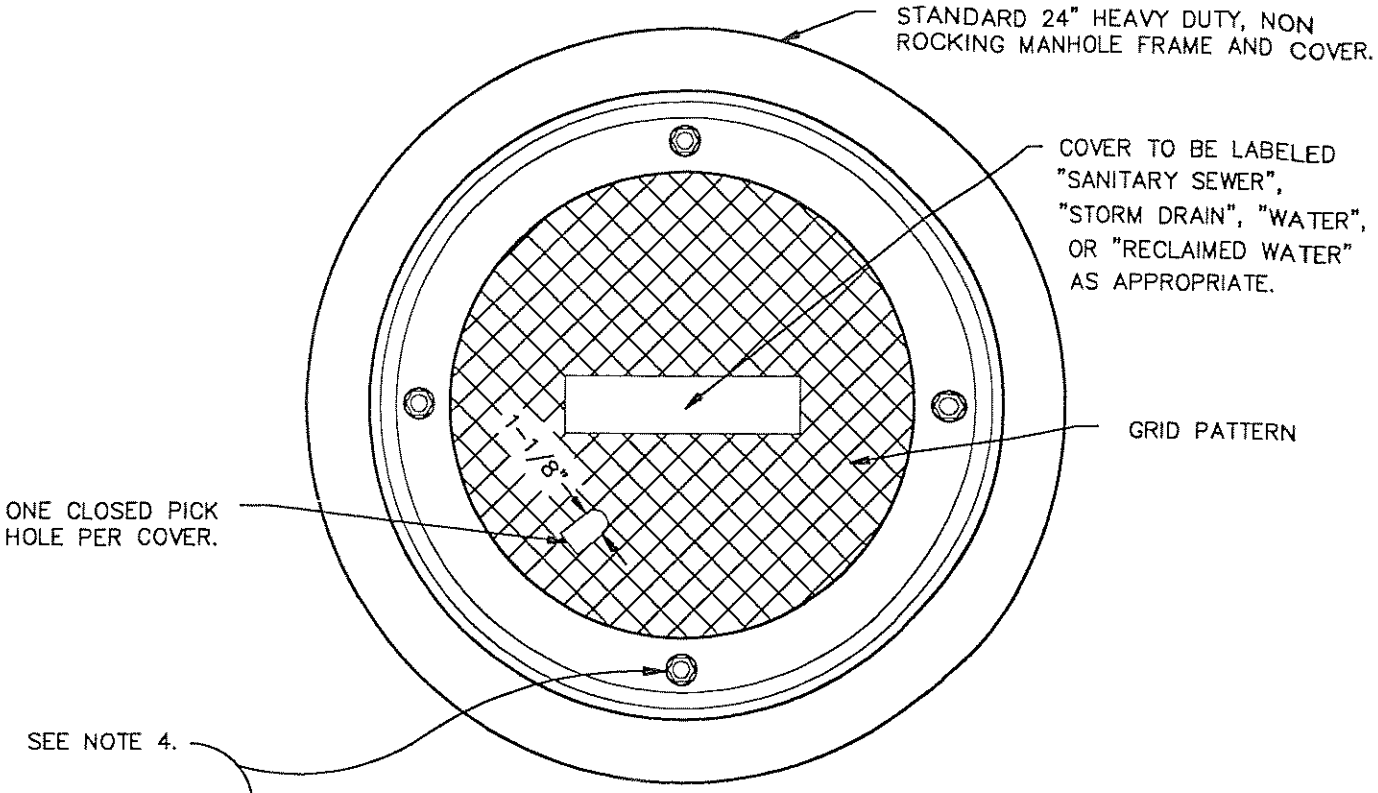

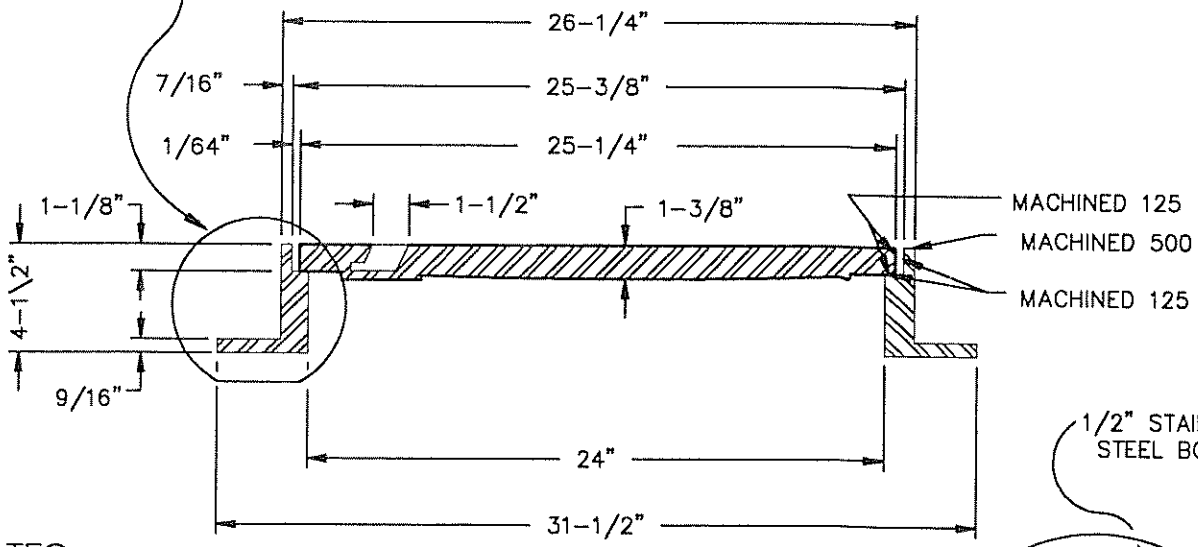

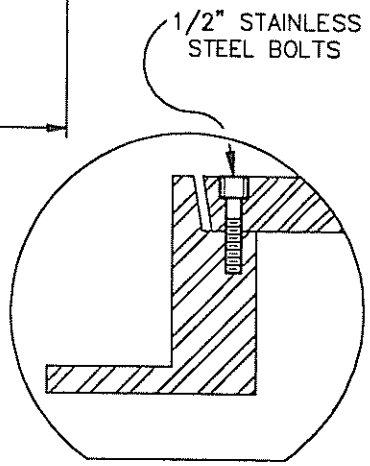

BOLT DOWN COVER DETAIL

NOTES:

1. SPECIFY SANITARY SEWER WHEN ORDERING.
   ALL CASTINGS SHALL BE DIPPED IN APPROVED ASPHALT PAINT.
2. ALL MATERIAL USED IN MANUFACTURING SHALL CONFORM TO A.S.T.M. DESIGNATION 48-30, OR TO UNITED STATES GOVERNMENT SPECIFICATIONS QQI-652B.
3. MINIMUM WEIGHT COMPONENTS: COVER - 130 POUNDS
   FRAME - 135 POUNDS
4. FOR BOLT DOWN COVER SEE DETAIL.

TOWN OF YOUNTVILLE	STANDARD MANHOLE FRAME AND COVER				STD. NO. WW 8
	SCALE: NONE	DRAWN: LMM	CHK: PHK	RVSD:	DATE: 1996

NOTES:

PIPE BEDDING AND TRENCH BACKFILL MATERIAL SHALL BE A WELL GRADED ¾"CRUSHED ROCK MATERIAL AND SHALL HAVE A MINIMUM SAND EQUIVALENT VALUE OF 20 AND SHALL CONFORM TO THE FOLLOWING GRADINGS:

	PERCENT PASSING			
	1 1/2"	1"	1/2"	NO.4
PIPE BEDDING	100	95–100	0–30	0–4
TRENCH BACKFILL	NATIVE MATERIAL MAY BE USED			

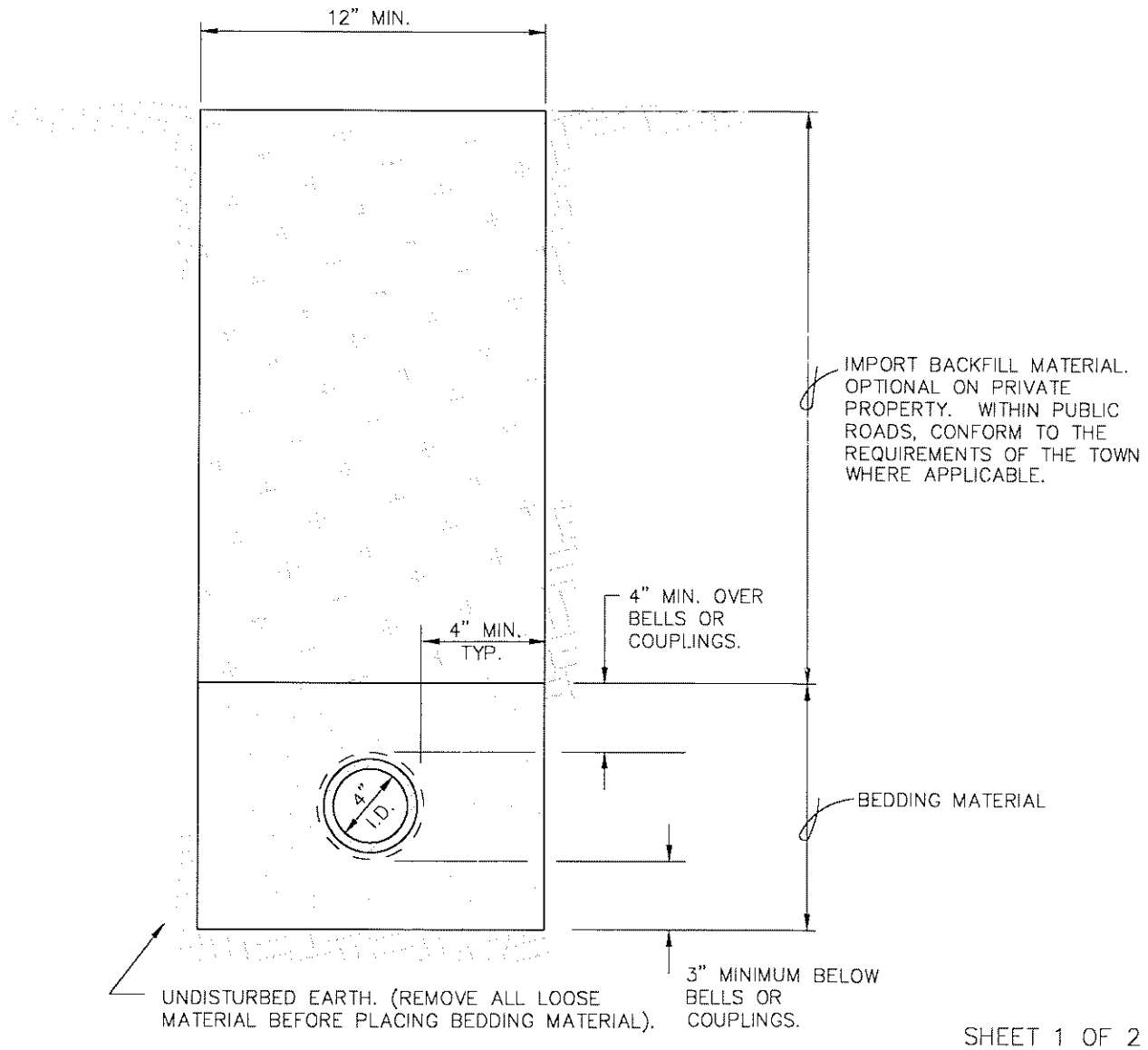

SHEET 1 OF 2

TOWN OF YOUNTVILLE	SERVICE SEWER TRENCH DETAIL ON PRIVATE PROPERTY				STD. NO. WW 9
	SCALE: NONE	DRAWN: LMM	CHK: PHK	RVSD:	DATE: FEB 2009

Images: Xrefs:
Path: F:\BMAP-STD\Yountvil\STDS\YNTWW9.DWG Layout Name: WW9-1 Plot Date: Jul 14, 2009 at 16:13

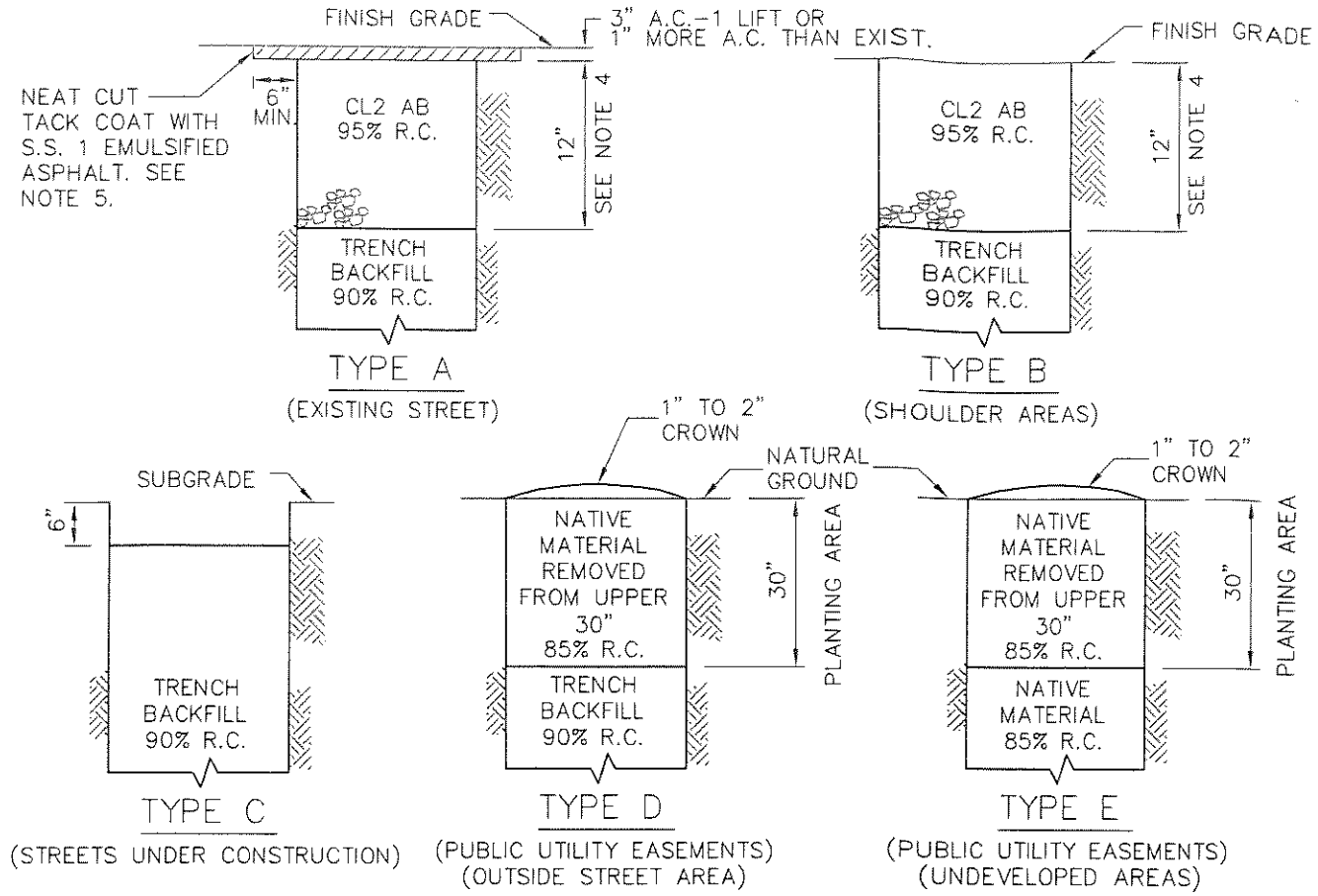

TRENCH BACKFILL AND SURFACING

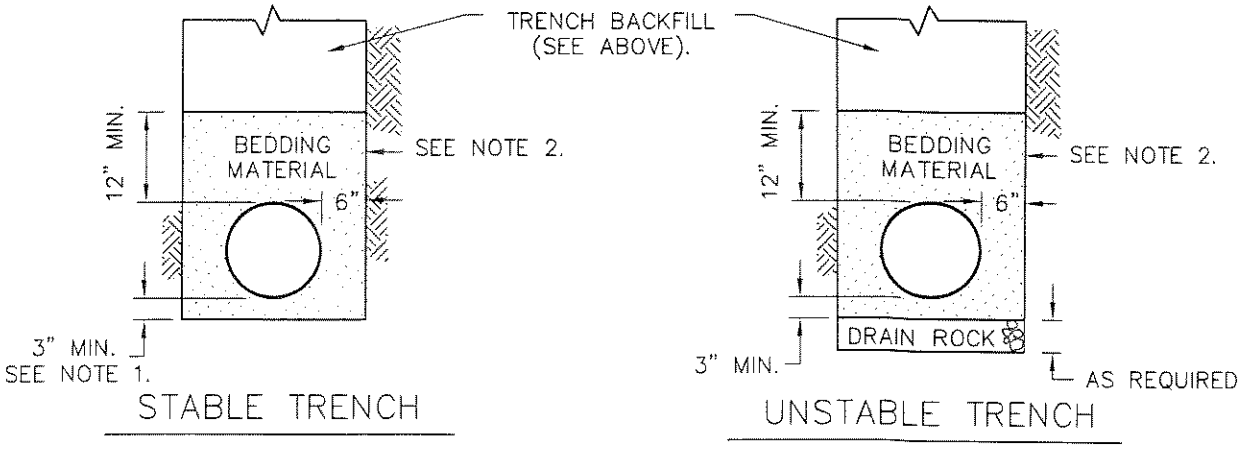

PIPE BEDDING

NOTES:

1. 1/4 PIPE O.D. OR 4" MIN. WHEN EXCAVATION IS IN ROCKY GROUND.
2. SEE SHEET 1 OF WW 9 FOR PIP BEDDING REQUIREMENTS.
3. RELATIVE COMPACTION DESIGNATED R.C.
4. THE STREET STRUCTURAL SECTION SHALL BE A MIN. OF 3" A.C. ON 12" A.B. OR MATCH EXISTING PAVEMENT THICKNESS PLUS 1" A.C., WHICHEVER IS THICKER OR AS SPECIFIED ON PLANS.
5. NEATLY CUT PAVEMENT NO LESS THAN SIX INCHES FROM EDGE OF TRENCH AFTER TRENCH IS BACKFILLED.

TOWN OF YOUNTVILLE	STANDARD TRENCH DETAIL				STD. NO. WW 9
	SCALE: NONE	DRAWN: CLG	CHK: PHK	RVSD:	DATE: FEB 2009

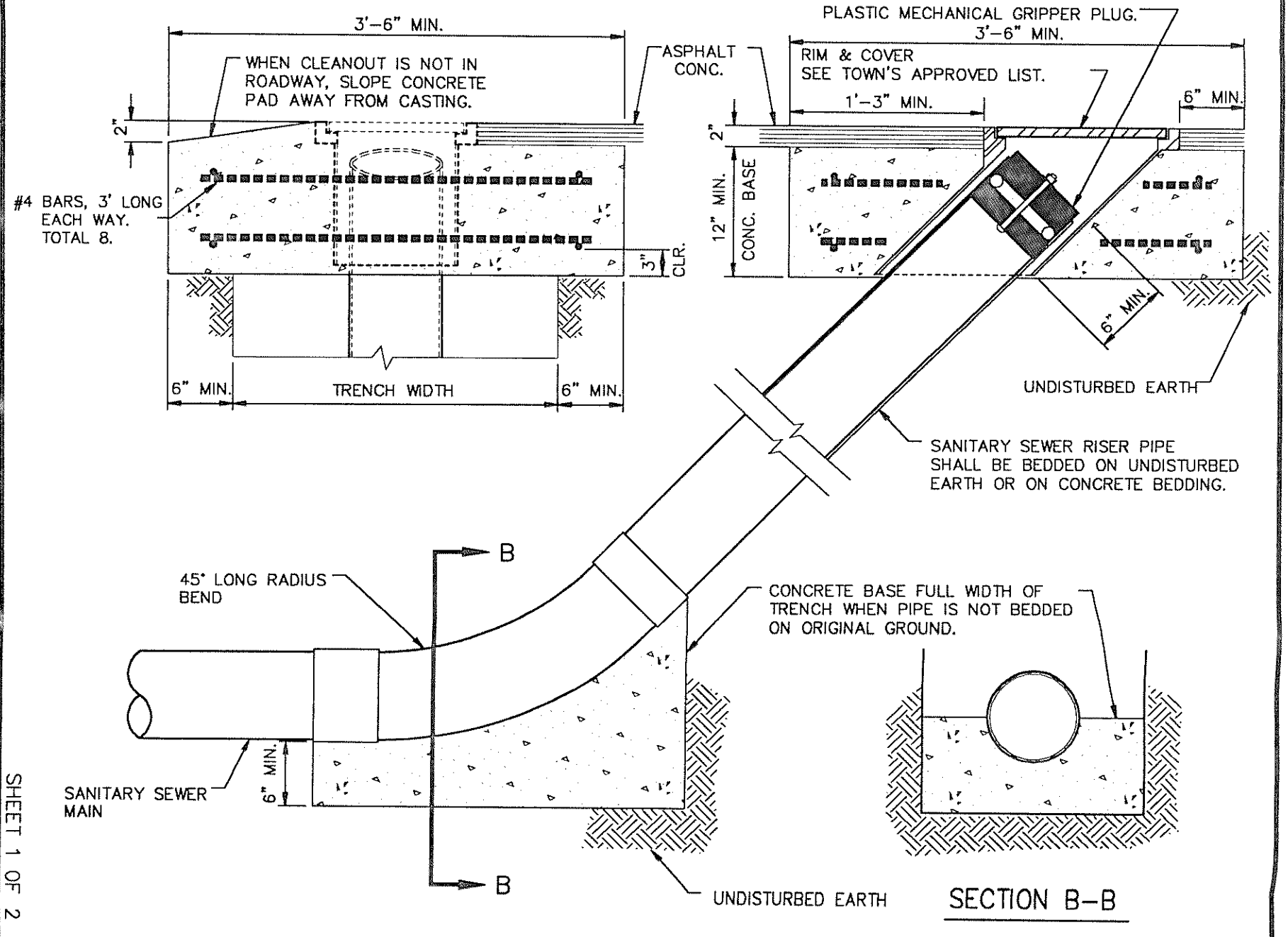

TOWN OF YOUNTVILLE

PERMANENT MAINLINE CLEANOUT

SCALE: NONE | DRAWN: LMM | CHK: PHK | RVSD:

DATE: 1996

STD. NO. WW 10

SHEET 1 OF 2

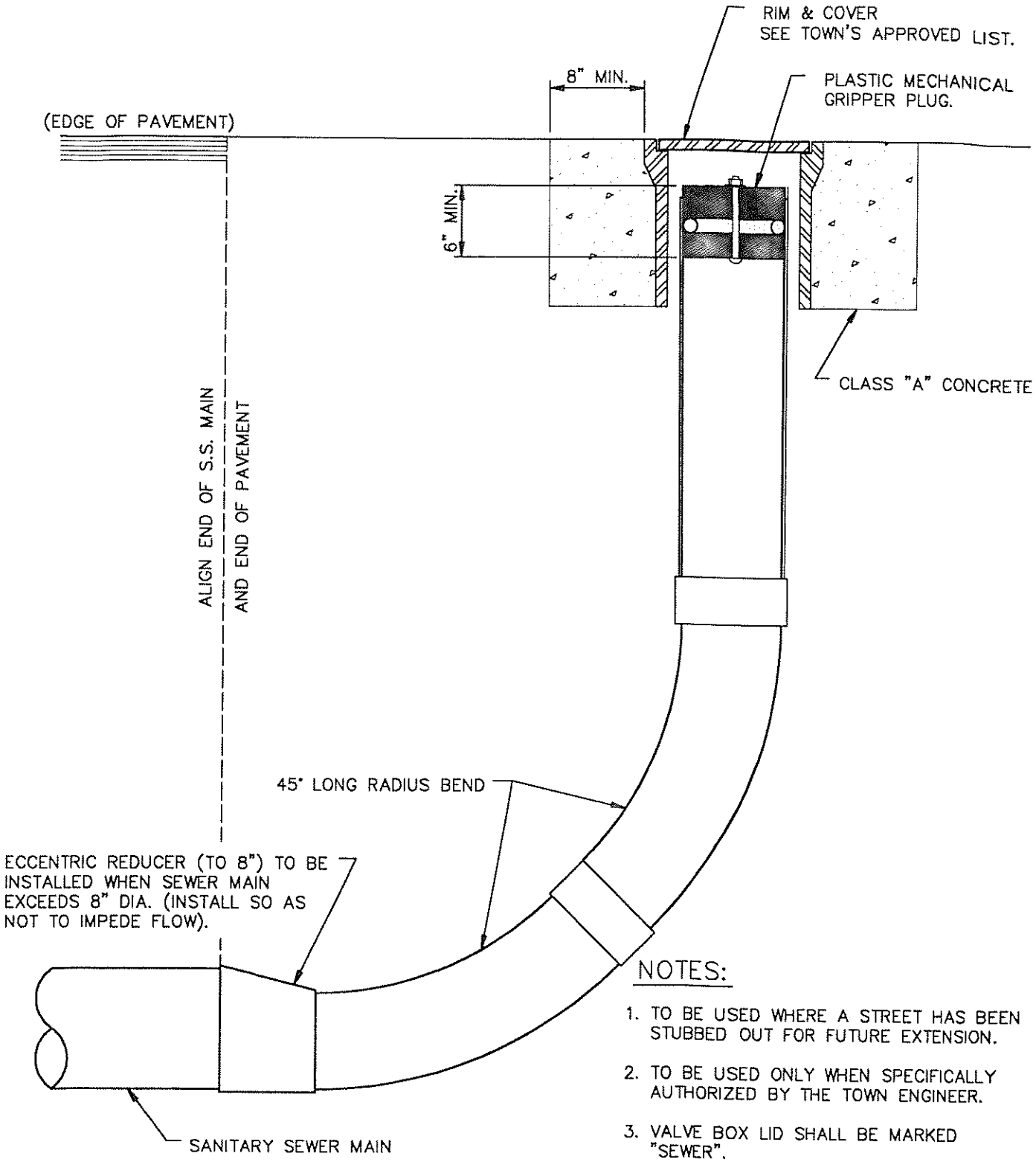

NOTES:

1. TO BE USED WHERE A STREET HAS BEEN STUBBED OUT FOR FUTURE EXTENSION.
2. TO BE USED ONLY WHEN SPECIFICALLY AUTHORIZED BY THE TOWN ENGINEER.
3. VALVE BOX LID SHALL BE MARKED "SEWER".
4. EASEMENT ACQUISITION MAY BE REQ'D.

SHEET 2 OF 2

TOWN OF YOUNTVILLE	TEMPORARY MAINLINE CLEANOUT				STD. NO. WW 10
	SCALE: NONE	DRAWN: LMM	CHK: PHK	RVSD:	DATE: 1996

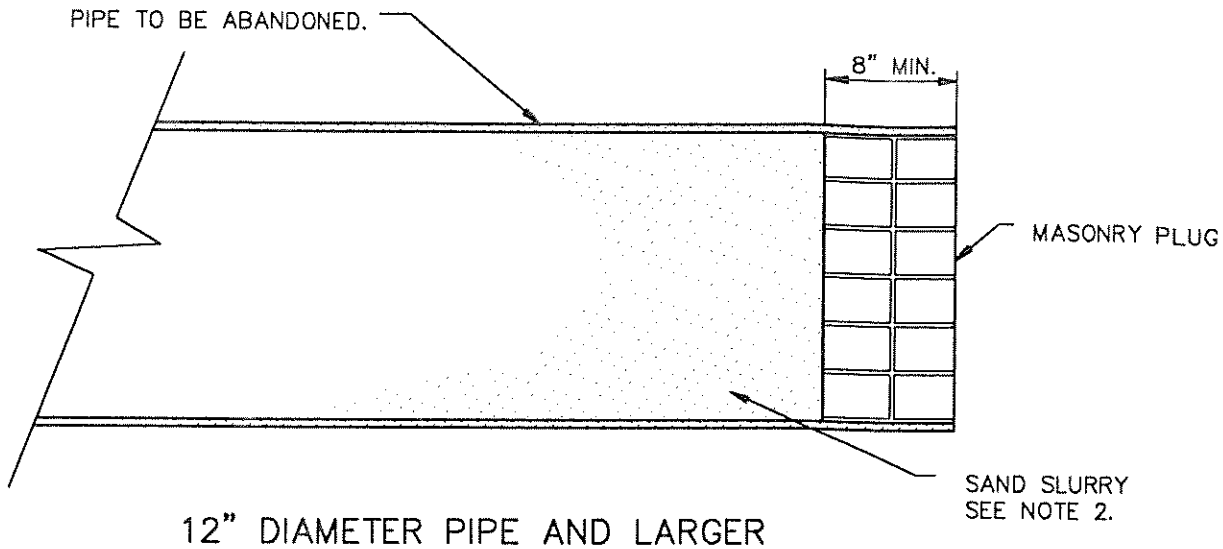

12" DIAMETER PIPE AND LARGER

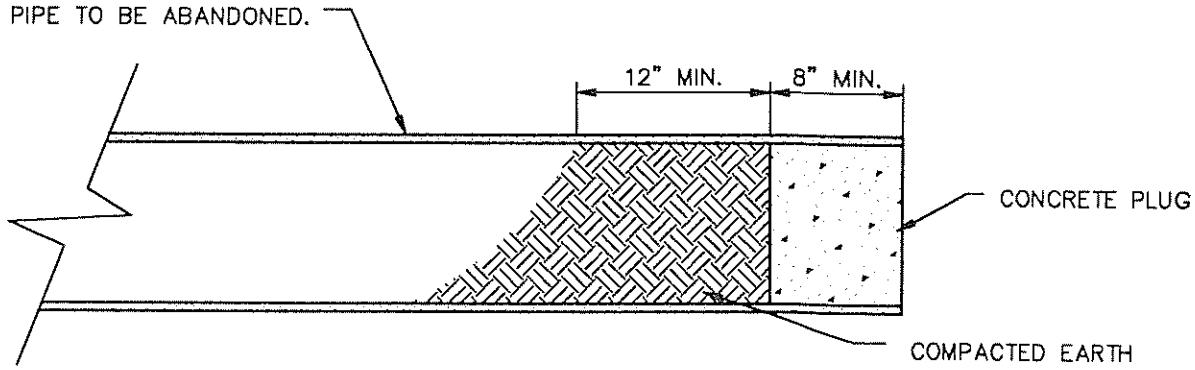

10" DIAMETER PIPE AND SMALLER

NOTES:

1. PIPE PLUGS SHALL BE INSTALLED TO THE SATISFACTION OF THE TOWN ENGINEER.
2. ABANDONED PIPES, 12" AND LARGER, SHALL BE BROKEN INTO EVERY 50' AND SHALL BE FILLED COMPLETELY WITH SAND SLURRY.

TOWN OF YOUNTVILLE	ABANDONED PIPE PLUG DETAIL				STD. NO. WW 11
	SCALE: NONE	DRAWN: LMM	CHK: PHK	RVSD:	DATE: 1996

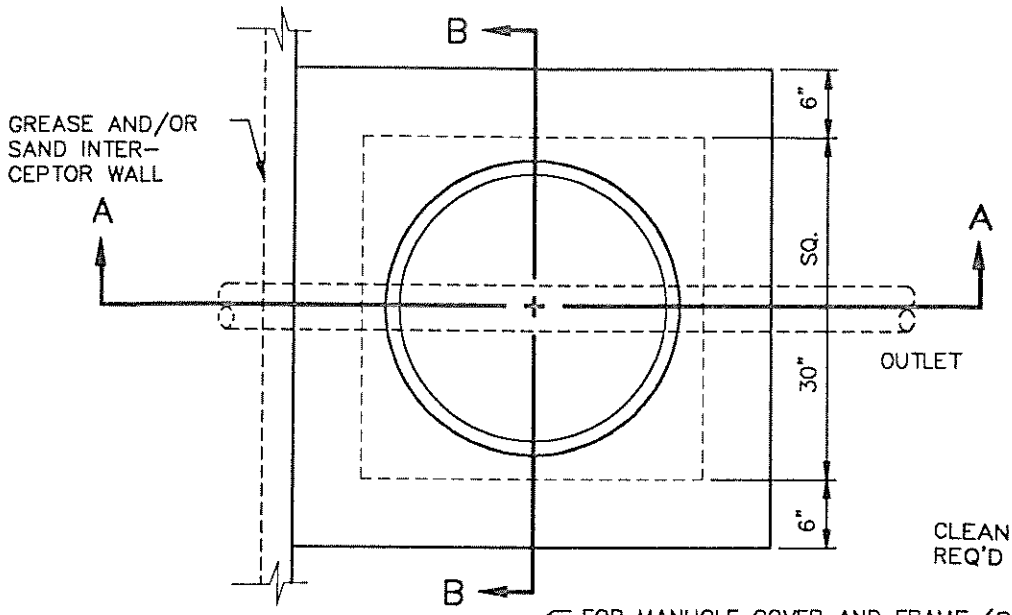

PLAN

NO SCALE

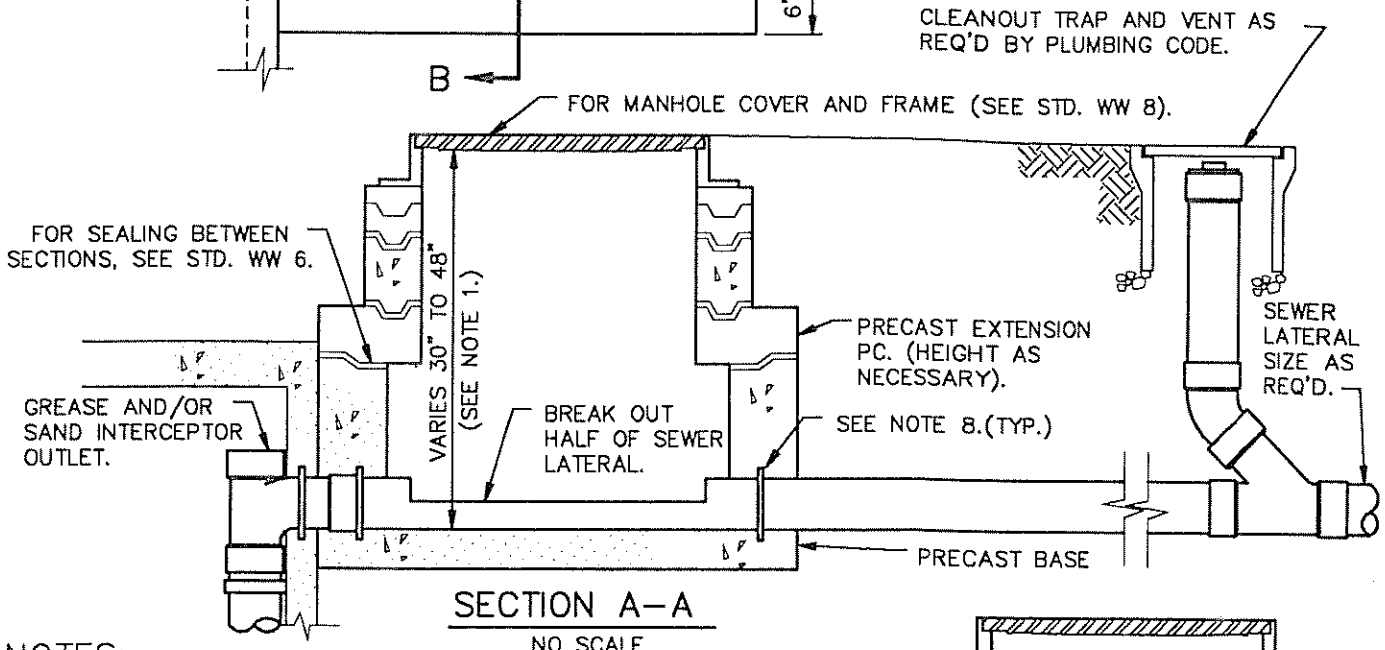

SECTION A–A

NO SCALE

NOTES:

1. IF LESS THAN 30" REVIEW WITH TOWN FOR ADD'L VAULT REQ'MTS. IF GREATER THAN 48" INSTALL SAMPLING M.H. SIM. TO STD. WW 6 WITH FLOW–THROUGH CUT–AWAY PIPE AS PER THIS STD.
2. SAMPLING M.H. TO BE LOCATED OUTSIDE OF PUBLIC RIGHT–OF–WAY EXCEPT WITH WRITTEN APPROVAL OF THE PUBLIC WORKS ENCROACHMENT OFFICER.
3. AN ALTERNATE DESIGN BY A REGISTERED ENGINEER MAY BE SUBMITTED FOR REVIEW BY THE TOWN.
4. LOCATION SUBJECT TO THE APPROVAL OF THE TOWN ENGINEER.
5. MANHOLE SHALL BE SANTA ROSA CAST PRODUCTS PRECAST CONC. DROP INLET BOX #5K WITH #5K X 24" DIAMETER TRANSITION SLAB.
6. ALL SURFACE WATER MUST DRAIN AWAY FROM SAMPLING M.H.
7. SAMPLING M.H. TO BE USED IN CONJUNCTION WITH EITHER STDS. WW 15 OR WW 16.
8. A WATERSTOP CONSISTING OF A STD. MANHOLE ADAPTER GASKET AS SUPPLIED BY THE PIPE MFR. TO BE GROUTED INTO THE BOX WALL NEAR THE CENTER OF THE WALL.

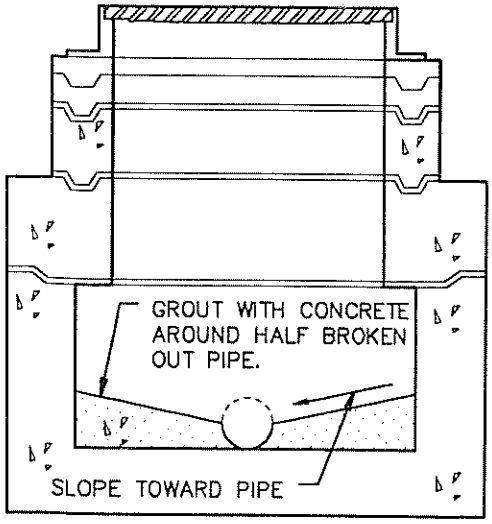

SECTION B–B

NO SCALE

TOWN OF YOUNTVILLE	SAMPLING MANHOLE EXTERIOR USE				STD. NO. WW 12
	SCALE: NONE	DRAWN: LMM	CHK: PHK	RVSD:	DATE: 1996

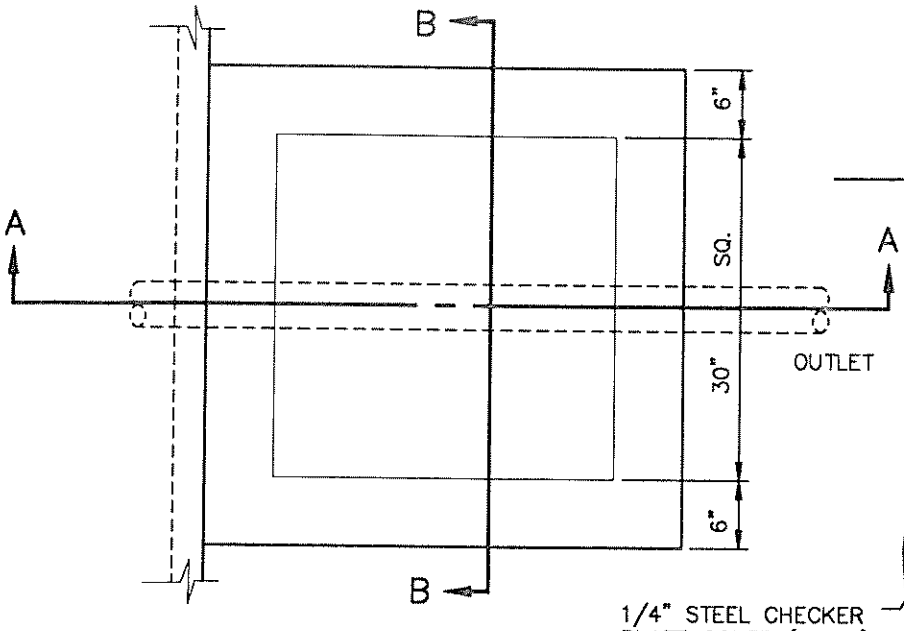

PLAN

NO SCALE

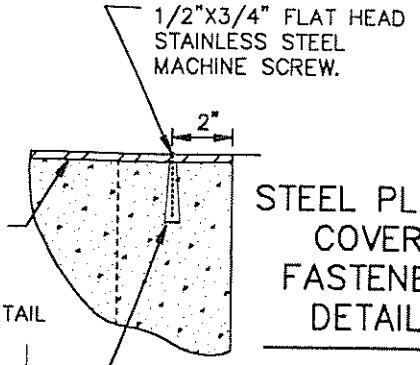

STEEL PLATE COVER FASTENER DETAIL

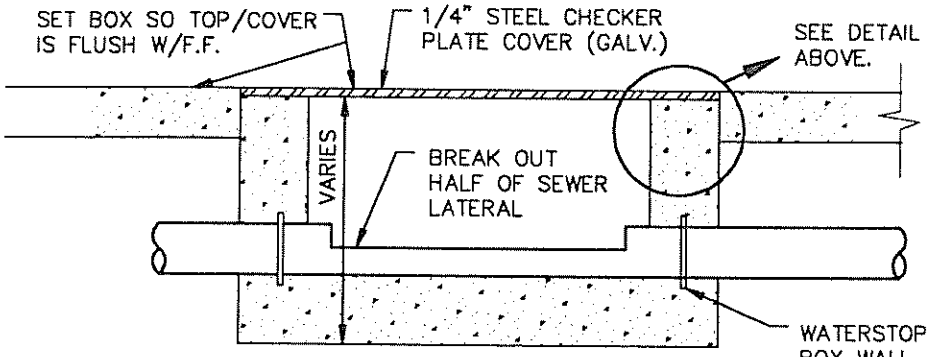

SECTION A – A

NO SCALE

NOTES:

1. TO BE USED IN THE INTERIOR OF BUILDINGS IN CONJUNCTION W/SAMPLING MANHOLE AND TO BE UPSTREAM OF THE SAMPLING MANHOLE.
2. LOCATION SUBJECT TO THE APPROVAL OF THE TOWN ENGINEER.
3. TO BE USED ONLY WITH THE APPROVAL OF THE TOWN ENGINEER.
4. ALTERNATE DESIGN BY A REGISTERED ENGINEER MAY BE SUBMITTED FOR REVIEW BY THE TOWN.
5. BOX SHALL BE SANTA ROSA CAST PRODUCTS MODEL 5K OR APPROVED EQUAL.
6. ALL SURFACE WATER MUST DRAIN AWAY FROM SAMPLING BOX.

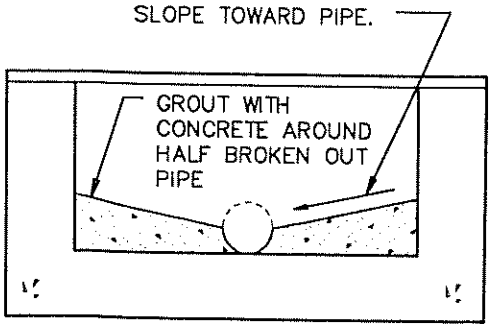

SECTION B – B

NO SCALE

7. SAMPLING BOX TO BE USED IN CONJUNCTION WITH EITHER STDS. WW 15 OR WW 16.
8. A WATERSTOP CONSISTING OF A STANDARD MANHOLE ADAPTER GASKET AS SUPPLIED BY THE PIPE MANUFACTURER SHALL BE GROUTED INTO THE BOX WALL NEAR THE CENTER OF THE WALL.

TOWN OF YOUNTVILLE	SAMPLING BOX BUILDING INTERIOR				STD. NO. WW 13
	SCALE: NONE	DRAWN: LMM	CHK: PHK	RVSD:	DATE: 1996

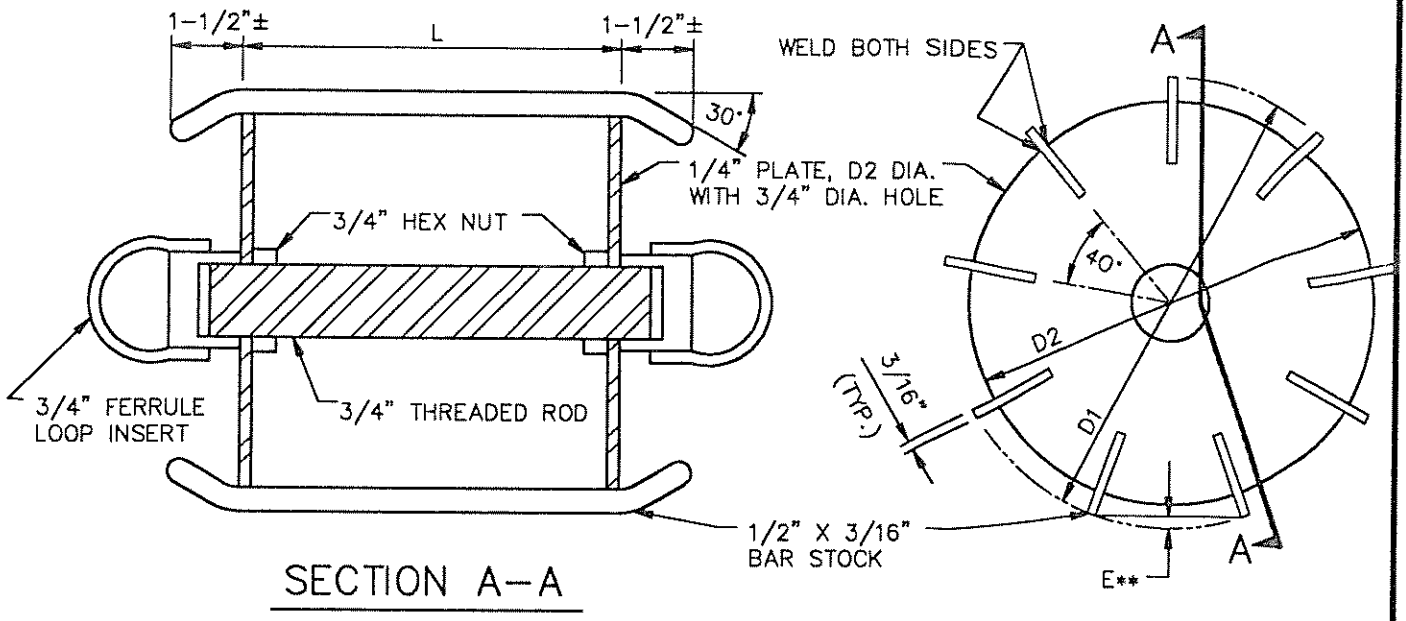

		5% DEFLECTION	
		ABS ASTM D 2751 PVC ASTM D 3034	
		SDR35	
NOM. DIA.	L	D1**	D2***
6"	6"	5.629	4.629
8"	8"	7.537	6.537
10"	10"	9.421	8.421
12"	12"	11.210	10.210
15"	15"	13.729	12.729

** 1. MANDREL DIA. HAS BEEN CALCULATED TO CORRECT CHORD LENGTH ERROR "E".

*** 2. MIN. PLATE DIAMETER

3. A PROVING RING OF THE SPECIFIED DIAMETER (D1) SHALL BE SUPPLIED WITH EACH DEFLECTION MANDREL..

NOTES:

1. MARK ALL MANDRELS WITH ASTM SPECIFICATION NUMBER, SDR NUMBER AND DEFLECTION.

2. THE 1/2" BAR STOCK ON EDGE PROVIDES CLEARANCE TO PASS SMALL AMOUNTS OF SOIL WHICH MAY BE IN PIPE.

TOWN OF YOUNTVILLE	PLASTIC SEWER PIPE DEFLECTION MANDREL				STD. NO. WW 14
	SCALE: NONE	DRAWN: LMM	CHK: PHK	RVSD:	DATE: 1996

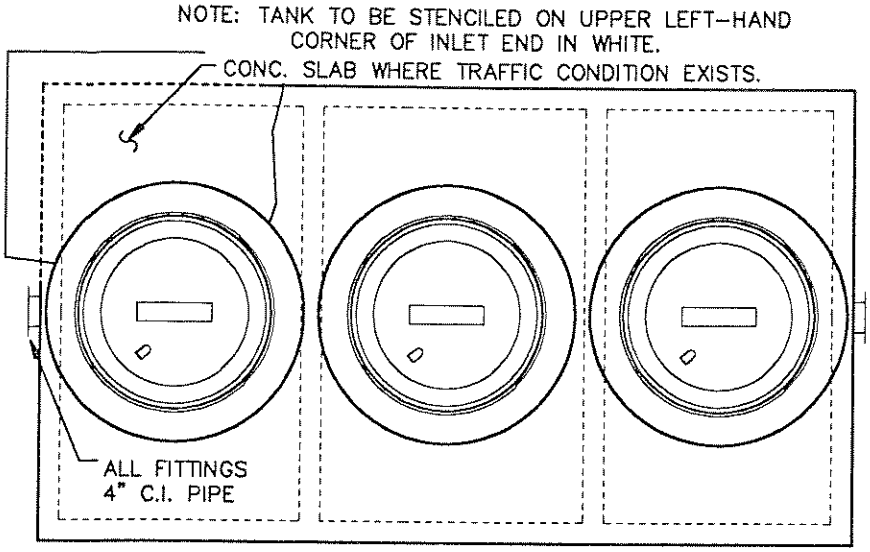

PLAN

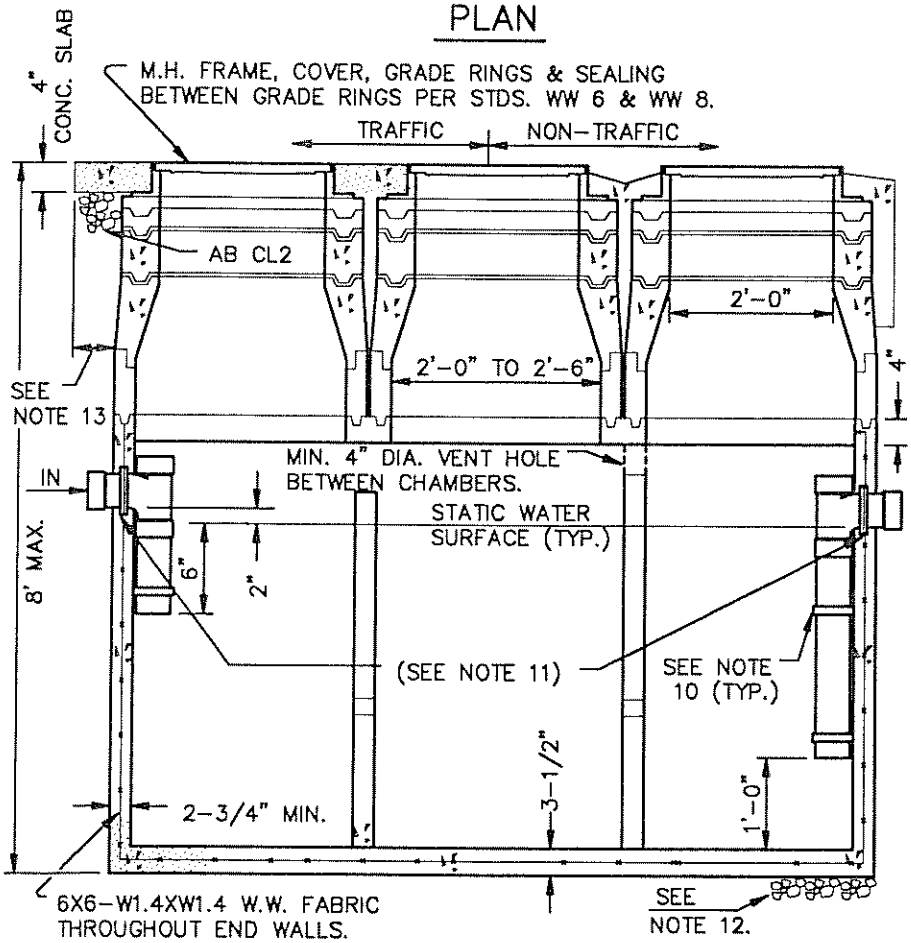

SECTION

NOTES:

1. TANK TO BE PRECAST AS MANUFACTURED BY:
   M.C. NOTTINGHAM
   PACIFIC CONC. PRODUCTS
   SELVAGE CONC. PRODUCTS
   OR TOWN APPROVED EQUAL.
2. ALL GREASE INTERCEPTORS SHALL BE LOCATED OUTSIDE PUBLIC R/W
3. GREASE INTERCEPTORS SHALL BE LOCATED OUTSIDE OF BUILDINGS IN A LOCATION ACCESSIBLE TO WASTE HAULER PUMPER.
4. ALTERNATE DESIGN BY A REGISTERED ENGINEER MAY BE SUBSTITUTED FOR REVIEW BY THE TOWN.
5. PIPE SHALL BE 6" MAX. DIAMETER PER U.P.C.
6. EXCAVATIONS SHALL BE NEAT LINE TYPICALLY ALL SIDES.
7. HEIGHT OF TANK ABOVE FITTINGS VARIABLE. ONE FT. SECTIONS MAY BE ADDED TO REQUIRED F.G.
8. ALL WYES SHALL BE ONE-WAY CLEANOUT WYES EXCEPT AS NOTED. TYPE PER U.P.C.
9. INTERCEPTOR TO BE USED IN CONJUNCTION WITH "SAMPLING MANHOLE" PER STD. WW 12.
10. STAINLESS STEEL CLAMP & BOLTS 3'-0" O.C. MAX. (TYP.) MIN. 2 REQ'D.
11. A WATERSTOP CONSISTING OF A STD. MANHOLE ADAPTER GASKET AS SUPPLIED BY THE PIPE MANUFACTURER SHALL BE GROUTED INTO THE INTERCEPTOR WALL NEAR THE CENTER OF THE WALL.
12. 3" MIN. BEDDING MAT'L PER TOWN STD. WW 9.
13. SLAB TO EXTEND MIN. 24" BEYOND ALL SIDES OF TANK. (TRAFFIC AREA)
14. TANK CAPACITY TO BE DETERMINED AT THE TIME OF INDUSTRIAL WASTE PERMIT APPLICATION.
15. PIPE & FITTINGS TO BE 4" SCH.. 40 PVC.
16. CONCRETE MIN. COMPRESSIVE STRENGTH OF 3000 PSI AT 28 DAYS.
17. ALL WASTE MUST ENTER THROUGH INLET FITTING.

NOTES: (CONT.)

18. REINFORCING BAR INTERMEDIATE GRADE ASTM A615-62T & A305-56T.
19. REINFORCING WIRE FABRIC- ASTM A185-61T.

TOWN OF YOUNTVILLE	SAND AND GREASE INTERCEPTOR				STD. NO. WW 15
	SCALE: NONE	DRAWN: LMM	CHK: PHK	RVSD:	DATE: 1996

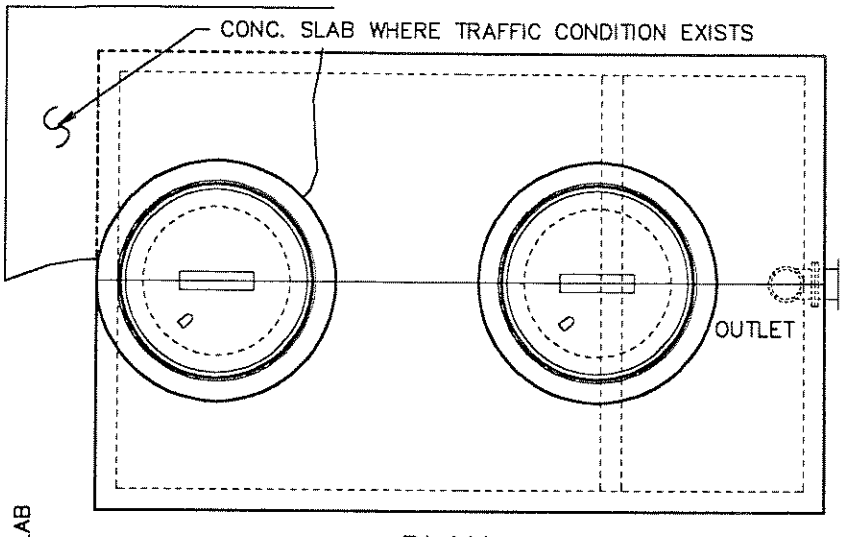

PLAN

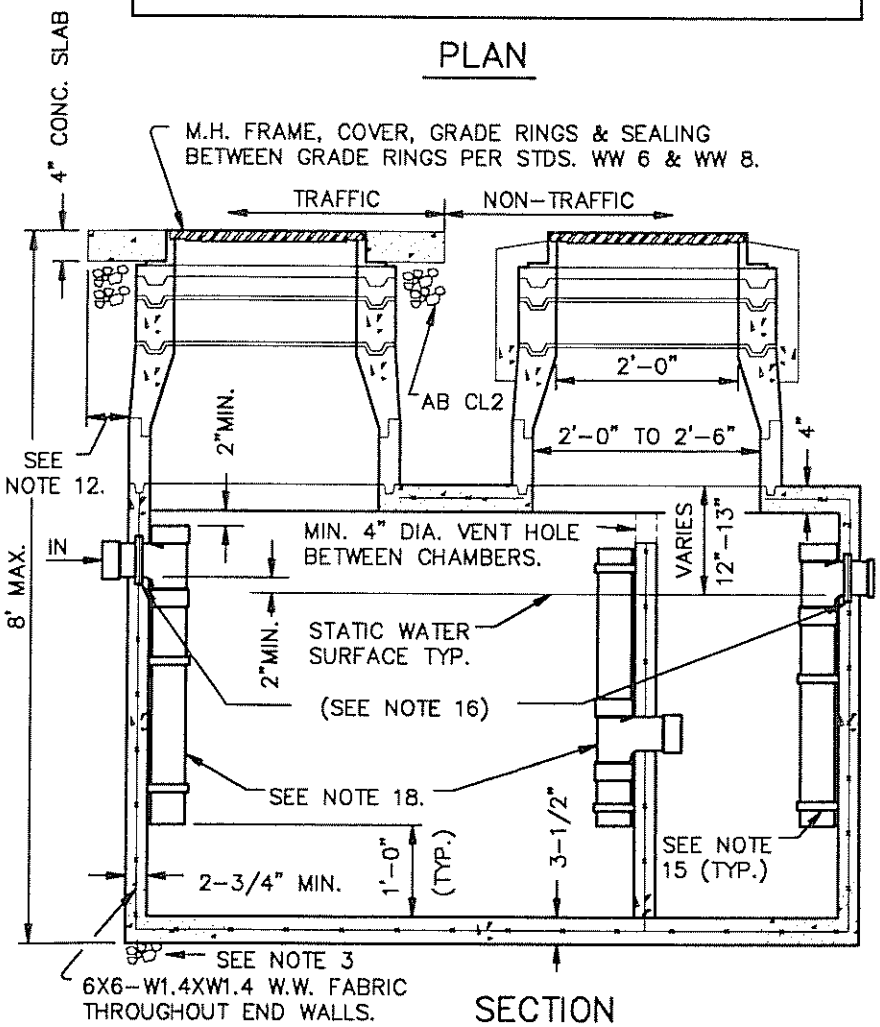

SECTION

NOTES:

1. TANK TO BE PRECAST AS MANUFACTURED BY:
   M.C. NOTTINGHAM
   PACIFIC CONC. PRODUCTS
   SELVAGE CONC. PRODUCTS
   OR TOWN APPROVED EQUAL.
2. POLYETHYLENE TANKS ACCEPTABLE IN NON-TRAFFIC AREAS UPON SPECIFIC APPROVAL OF THE TOWN ENGINEER.
3. 3" MIN. BEDDING MAT'L PER STD. WW 9.
4. ALL SURFACE WATER MUST DRAIN AWAY FROM MANHOLES.
5. PIPE SHALL BE 6" MAX. DIAMETER PER U.P.C.
6. CONCRETE MIN. COMPRESSIVE STRENGTH OF 3000 PSI AT 28 DAYS.
7. ALL WYES SHALL BE ONE-WAY CLEANOUT WYES EXCEPT AS NOTED. TYPE PER U.P.C.
8. GREASE INTERCEPTORS SHALL BE LOCATED OUTSIDE OF BUILDINGS IN A LOCATION ACCESSIBLE TO WASTE HAULER PUMPER.
9. ALL GREASE INTERCEPTORS SHALL BE LOCATED OUTSIDE PUBLIC RIGHT-OF-WAY.
10. EXCAVATIONS SHALL BE NEAT LINE TYPICALLY ALL SIDES.
11. INTERCEPTOR TO BE USED IN CONJUNCTION WITH "SAMPLING MANHOLE" PER STD. WW 12.
12. SLAB TO EXTEND MIN. 24" BEYOND ALL SIDES OF TANK. (TRAFFIC AREA)
13. ALL WASTE MUST ENTER THROUGH INLET FITTING ONLY.
14. TANK TO BE STENCILED ON UPPER LEFT HAND CORNER OF INLET END IN WHITE.
15. STAINLESS STEEL CLAMP & BOLTS 3'-0" O.C. MAX. (TYP.) MIN. 2 REQ'D.
16. A WATERSTOP CONSISTING OF A STD. MANHOLE ADAPTER GASKET AS SUPPLIED BY THE PIPE MANUFACTURER SHALL BE GROUTED INTO THE INTERCEPTOR WALL NEAR THE CENTER OF THE WALL.

NOTES: (CONT.)

17. TANK CAPACITY TO BE DETERMINED AT THE TIME OF INDUSTRIAL WASTE PERMIT APPLICATION. 750 GAL. MINIMUM.
18. PIPE & FITTINGS TO BE 4" SCH. 40 PVC.
19. REINFORCING BARS INTERMEDIATE GRADE ASTM A615-62T & A305-56T. REINFORCING WIRE FABRIC - ASTM A185-61T.
20. ALTERNATE DESIGN BY A REGISTERED ENGINEER MAY BE SUBSTITUTED FOR REVIEW BY THE TOWN.

TOWN OF YOUNTVILLE	GREASE INTERCEPTOR				STD. NO. WW 16
	SCALE: NONE	DRAWN: LMM	CHK: PHK	RVSD:	DATE: 1996